# Model YK-EP Efficiency Plus Centrifugal Liquid Chiller Style B

## 2,500 ton to 3,500 ton (8,800 kW to 12,300 kW), Using R-134a and R-513A Refrigerant

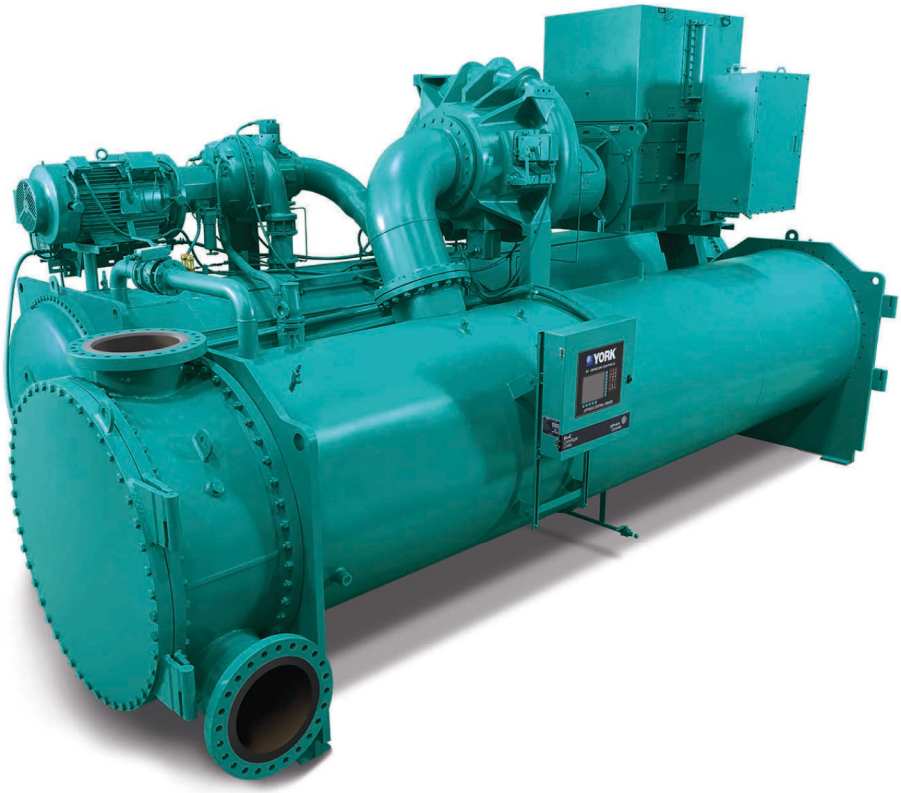


Engineering Guide

Issue Date: 2024-01-03

Form Number: 160.87-EG1 (124)

Supersedes: 160.87-EG1 (1121)

# Contents

Nomenclature.....5
Introduction.....6
Sustainability.....9
Unit components.....10
Equipment overview.....12
System flow diagram.....17
OptiView™ control center.....20
Starters and drives.....37
Accessories and modifications.....46
Application data.....49
Electrical considerations.....56
Dimensions.....68
Isolators.....85
Weights.....93
Guide specifications.....94

# Nomenclature

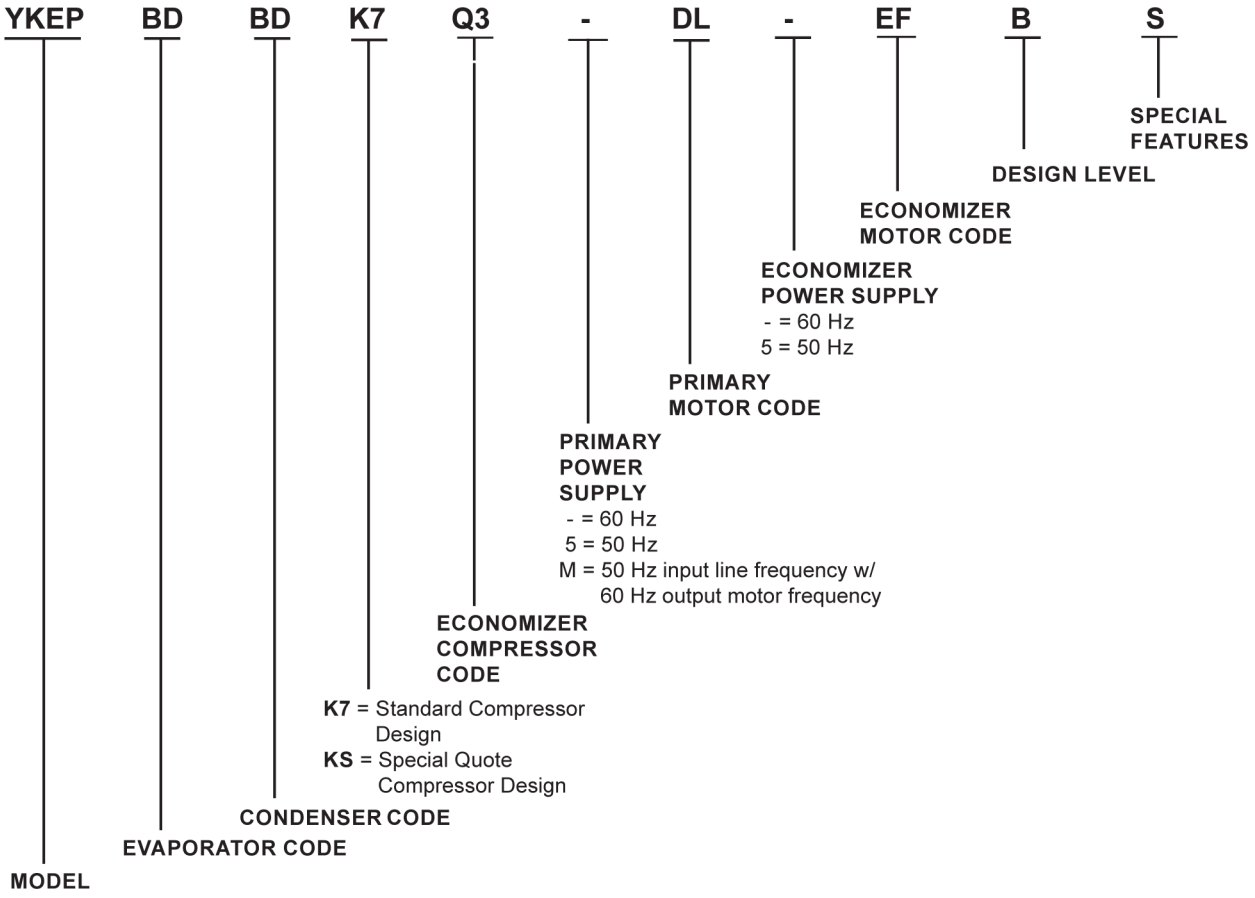


## Approvals

- ASME Boiler and Pressure Vessel Code – Section Vlll Division 1
- AHRI Standard 550/590 or 551/591, when applicable up to 3,000 tons or 10,500 kW
- c/UL: Underwriters Laboratory
- ASHRAE 15 – Safety Code for Mechanical Refrigeration
- ASHRAE Guideline 3 – Reducing Emission of Halogenated Refrigerants in Refrigeration and Air-Conditioning Equipment and Systems
- NEC – National Electrical Code
- OSHA – Occupational Safety and Health Act

Due to the configurability of this product, images contained in this document are illustrations and may represent the standard product with available options.

# Introduction

The YORK® YK-EP Chiller extends the range of the YORK single-stage centrifugal chiller product range by providing additional capacity and greater efficiency through an economized cycle. This is the only product available that uses a second single-stage compressor to perform half lift in parallel. The advantage of this cycle is greater control flexibility to move the intermediate pressure to maximize efficiency or extend cooling capacity.

## Matched components maximize efficiency

Actual chiller efficiency cannot be determined by analyzing the theoretical efficiency of any one chiller component. It requires a specific combination of heat exchanger, compressor, and motor performance to achieve the lowest system kW/ton. YORK YK-EP chiller technology matches chiller system components to provide maximum chiller efficiency under actual – not just theoretical – operating conditions.

Off-design is not only part load, but full load operation as well, with reduced ECWTs.

## Real-world energy performance

Johnson Controls pioneered the term Real-World Energy to illustrate the energy-saving potential of focusing on chiller performance during off-design conditions. Off-design is not only part load, but full load operation as well, with reduced entering condenser water temperatures (ECWTs). Where chillers operate 99% of the time, operating costs add up.

YORK YK-EP chillers are designed to operate on a continuous basis with cold ECWTs and full condenser flow at all load points, taking full advantage of real-world conditions. This type of operation benefits the cooling tower as well, by reducing cycling of the fan motor and ensuring good coverage of the cooling tower fill.

YORK YK-EP chillers offer the most efficient real-world operation of any chiller, meaning lower operating costs and an excellent return on your chiller investment.

## Open-drive design

Hermetic motor burnout can cause catastrophic damage to a chiller. The entire chiller must be cleaned, and the refrigerant replaced. YORK YK-EP centrifugal chillers eliminate this risk by utilizing air-cooled motors. Refrigerant never comes in contact with the motor, preventing contamination of the rest of the chiller. Insurance companies that offer policies on large air conditioning equipment often consider air-cooled motors a significant advantage over hermetic refrigerant-cooled units.

## High efficiency heat exchangers

YK-EP chiller heat exchangers offer the latest technology in heat transfer surface design to give you maximum efficiency and compact design. Waterside and refrigerant side design enhancements minimize both energy consumption and tube fouling.

## Single-stage compressor design and efficiency proven in the most demanding applications

Designed to be the most reliable chillers we've ever made, YORK centrifugal chillers incorporate a single-stage compressor design. With fewer moving parts and straightforward, efficient engineering, YORK single-stage compressors have proven durability records in hospitals, chemical plants, gas processing plants, the U.S. Navy, and in other applications where minimal downtime is a crucial concern.

In thousands of installations worldwide, YORK single-stage compressors are working to reduce energy costs. High strength aluminum-alloy compressor impellers feature backward curved vanes for high efficiency. Airfoil shaped pre-rotation vanes minimize flow disruption for the most efficient part load performance. Precisely positioned and tightly fitted, they allow the compressor to unload smoothly from 100% to minimum load for excellent operation in air conditioning applications.

## Precision control of compressor oil pressure

Utilizing our expertise in variable speed drive technology and applications, Johnson Controls has moved beyond the fixed head and bypass approach of oil pressure control. The old approach only assured oil pressure at the outlet of the pump, rather than at the compressor, and allows no adjustment during chiller operation. YK-EP chillers feature two variable speed oil pumps (VSOPs), one for each compressor, to monitor and provide the correct amount of oil flow to the compressors on a continuous basis. This design also provides sophisticated electronic monitoring and protection of the oil pump electrical supply, ensuring long life and reliable operation of the oil pump motor. Variable speed drive technology reduces oil pump power consumption, running only at the speed required, rather than at full head with a pressure regulating bypass valve.

## Factory packaging reduces field labor costs

YORK YK-EP centrifugal chillers are designed to keep installation costs low. YK-EP chillers can be shipped using Form 2, Form 3, or Form 7 shipment methods.

Form 2 shipment allows the chiller to be shipped completely packaged as one assembly and saves on installation time. Form 3 shipment requires the two drive lines to ship separate from the shells as three major assemblies. Form 7 shipment, for more complex installations, ensures the two drivelines, evaporator, and condenser shells are split apart into four major assemblies.

In all three shipping methods, refrigerant and oil charges are shipped separately, connections are closed/flanged, wiring connections are simple plug-type to ensure simple commissioning using a starter, and heat exchanger refrigerant sides are charged with nitrogen.

## Take advantage of colder cooling tower water temperatures

YORK YK-EP centrifugal chillers have been designed to take full advantage of colder cooling tower water temperatures, which are naturally available during most operating hours. Considerable energy savings are available by letting tower water temperature drop, rather than artificially holding it above 75°F (23.9°C), especially at full load and full condenser flow, as some chillers require. 50°F (10°C) is used as the standard in many scenarios depending on the conditions, but this minimum ECWT should be validated using the formula in Water circuits.

## Off design performance

Since the vast majority of its operating hours are spent at off design conditions, a chiller should be chosen not only to meet the full load design, but also for its ability to perform efficiently at lower loads and lower tower water temperatures. It is not uncommon for chillers with the same full load kW/ton to have an operating cost difference of over 10% due to part load operation.

Part load information can be easily and accurately generated by use of a computer. And because it is so important to an owner's operating budget, this information has now been standardized within the AHRI Certification Program in the form of an Integrated Part Load Value (IPLV), and Non Standard Part Load Value (NPLV).

The IPLV/NPLV formulas from AHRI Standard 550/590 much more closely track actual chiller operations. A more detailed analysis must take into account actual building load profiles, and local weather data. Part load performance data should be obtained for each job using its own design criteria.

## AHRI certification program

YORK YK-EP chillers have been tested and certified by Air- Conditioning, Heating and Refrigeration Institute (AHRI) in accordance with the latest edition of AHRI Standard 550/590 (I-P) and 551/591, up to 3,000 tons or 10.550 kW. Under this certification program, chillers are regularly tested in strict compliance with this standard. This provides an independent, third-party verification of chiller performance. Refer to the AHRI site at: http://www.ahrinet.org/WCCL for complete Program Scope, Inclusions, and Exclusions as some options listed herein fall outside the scope of the AHRI certification program. For verification of certification, go to the AHRI Directory at http://www.ahridirectory.org.

## UL compliance: your assurance of reliability

YORK YK-EP centrifugal chillers conform to UL standards for listing by a qualified nationally recognized testing laboratory for the United States and Canada. Recognition of safety and reliability is your assurance of trouble free performance in day-to-day building operation. Some chiller options or modifications may affect the UL compliance of the chiller. Some examples include:

- Special motor enclosures, such as like TEFC, TEWAC, or TEAAC
- Special panels, such as NEMA 4X
- Special unit wiring options, anything other than NEMA 1

For further clarification, contact your local Johnson Controls sales office.

## Computerized performance ratings

Each chiller is custom matched to meet the individual building load and energy requirements. Several standard heat exchanger tube bundle sizes and pass arrangements are available to provide the best possible match.

It is not practical to provide tabulated performance for each combination, as the energy requirements at both full and part load vary significantly with each heat exchanger and pass arrangement. Computerized ratings, tailored to specific job requirements, are available through each Johnson Controls Sales Office.

# Sustainability

Over 95% of the global-warming potential (GWP) of a centrifugal chiller is from the indirect effect or the greenhouse gases generated in the production of electricity to run the chiller. Less than 5% of the GWP is from the direct effect or release of the refrigerant gases into the atmosphere.

To combat the direct effect, the YK-EP chiller employs the most environmentally friendly medium pressure refrigerants available, R-134a and R-513A, in accordance with the Montreal Protocol. Using R-134a and R-513A provides options to achieve better results based on customer and local regulatory requirements when using the US Green Building Council's (USGBC) Template EAc4 (Enhanced Refrigerant Management) to calculate the refrigerant impact of your project.

The YK-EP chiller is also designed for efficient performance to reduce the indirect effect. The YK-EP chiller uses less energy, which reduces the greenhouse gases generated in the production of electricity to run the chiller. This can help qualify your project for up to 2 more LEED points using the advanced refrigerant-management credit.

# Unit components

**Figure 1: Chiller front view**

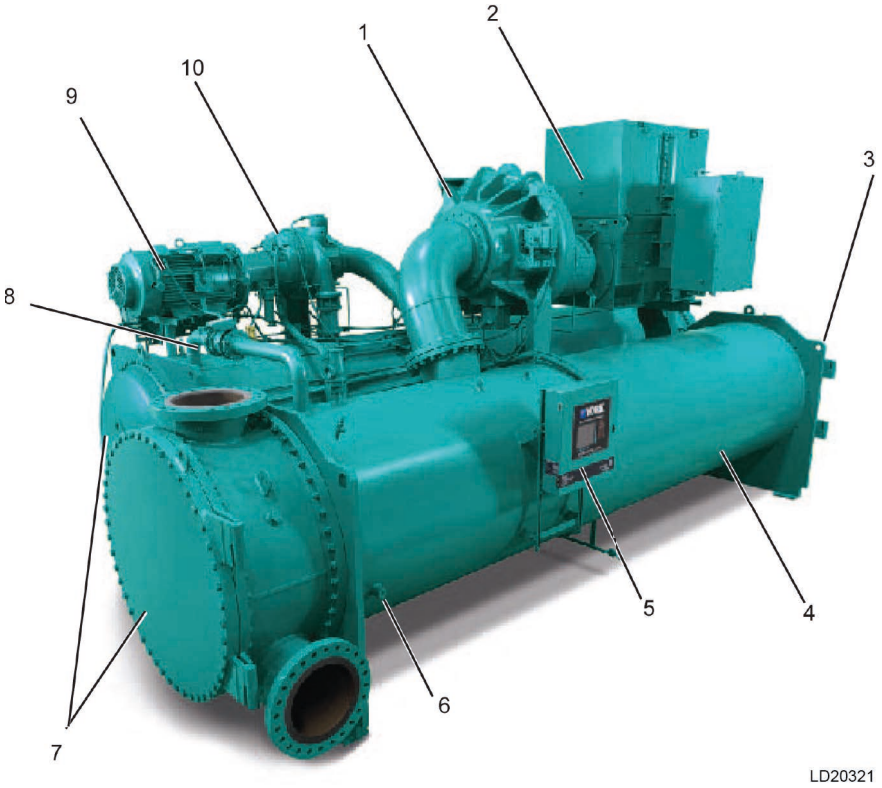


| Component | Description |
|---|---|
| 1 | Primary Compressor |
| 2 | Primary Open Drive Motor |
| 3 | Lifting Hole |
| 4 | Evaporator |
| 5 | OptiView™ Control Panel |
| 6 | Refrigerant Level Sight Glass |
| 7 | Marine Waterboxes (Optional) |
| 8 | Hot Gas Bypass (Optional) |
| 9 | Economizer Open Drive Motor |
| 10 | Economizer Compressor |

**Figure 2: Chiller rear view**

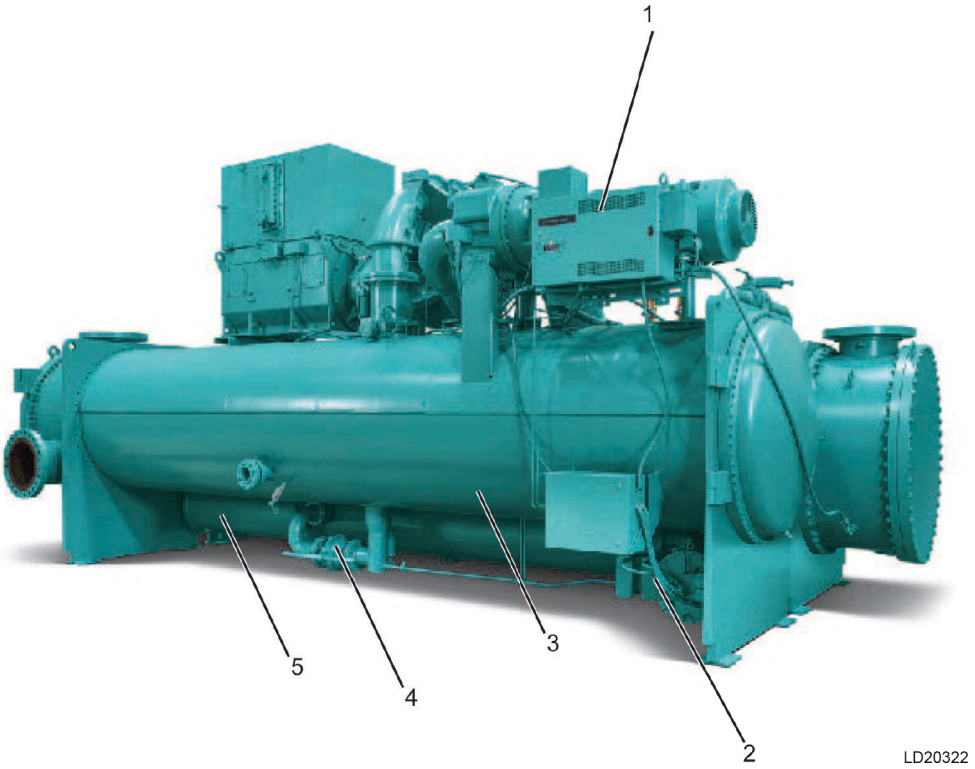


| Component | Description |
|---|---|
| 1 | Economizer Unit Mounted LVSSS (Required) |
| 2 | Variable Speed Oil Pump |
| 3 | Condenser |
| 4 | Isolation Valve |
| 5 | Economizer |

# Equipment overview

YORK YK-EP Efficiency Plus Centrifugal Liquid Chillers can be factory-packaged including the evaporator, condenser, economizer, compressors, motors, lubrication system, control center, interconnecting unit piping, and wiring. The initial charge of refrigerant and oil is supplied for each chiller, and is shipped separately from the unit. Actual shipping procedures depends on a number of project-specific details.

The services of a Johnson Controls factory-trained, field service representative are incurred to supervise or perform the final leak testing, charging, the initial start-up, and concurrent operator instructions.

Lubrication oil is force-fed to all bearings, gears, and rotating surfaces by a variable speed drive pump, which operates before startup.

## Compressors

Two centrifugal compressors are provided, operating partially in parallel and discharging to a common condenser on the chiller. Check valves are supplied on the discharge of the economizer compressor to control refrigerant flow during single compressor operation.

Each of the YK-EP's two compressors is a single-stage centrifugal type powered by an open-drive electric motor. The casing is fully accessible with vertical circular joints and fabricated of close-grain cast iron. The complete operating assembly is removable from the compressor and scroll housing.

YK-EP uses the K7 compressor. As an alternative, a new compressor requiring a special quote with the nomenclature KS is offered, yielding two major benefits. One modification improves performance characteristics while the other reduces pressure in high head applications.

The rotor assembly consists of a heat-treated alloy steel drive shaft and impeller shaft with a high strength, cast aluminum alloy, fully shrouded impeller. The impeller is designed for balanced thrust and is dynamically balanced and overspeed tested for smooth, vibration free operation.

The insert-type journal and thrust bearings are fabricated of aluminum alloy and are precision bored and axially grooved. The specially engineered, single helical gears with crowned teeth are designed so that more than one tooth is in contact at all times to provide even distribution of compressor load and quiet operation. Gears are integrally assembled in the compressor rotor support and are film lubricated. Each gear is individually mounted in its own journal and thrust bearings to isolate it from impeller and motor forces.

## OptiSound™ control

The YORK OptiSound™ Control is a patented combination of centrifugal chiller hardware and software that reduces operational sound levels, expands the chiller operating range, and improves chiller performance. The OptiSound Control feature continuously monitors the characteristics of the compressor discharge gas and optimizes the diffuser spacing to minimize gas-flow disruptions from the impeller. This innovative technology improves operating sound levels of the chiller by an average of 7 dBA, and up to 13 dBA on the largest models, far superior to competitor sound levels. It can also reduce part-load sound levels below the full-load level.

In addition, the OptiSound Control provides the benefit of an expanded operating range. It improves performance and reliability by minimizing diffuser gas stall at off design operation, particularly conditions of very low load combined with little or no condenser water relief. The elimination of the gas stall condition can also result in improved chiller efficiency at off design conditions.

**Figure 3: Typical centrifugal compressor**

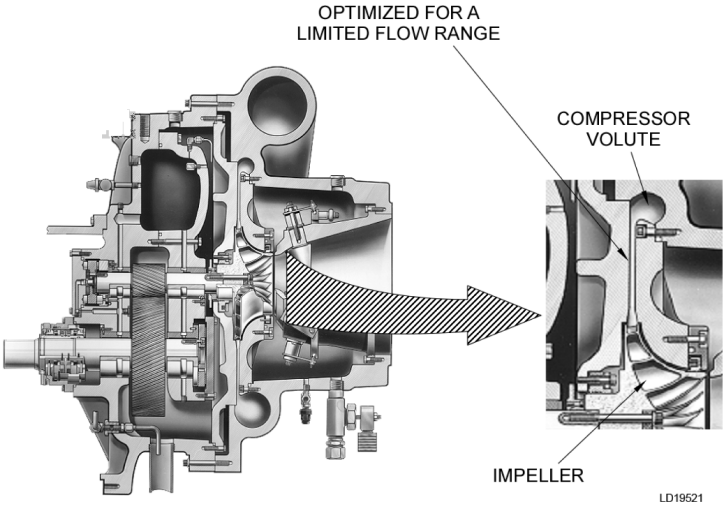


## Capacity control

Pre-rotation vanes (PRVs) modulate chiller capacity from 100% to 15% of design for normal air conditioning applications. Operation is by an external, electric PRV motor-actuator which automatically controls the vane position to maintain a constant leaving chilled liquid temperature. Rugged airfoil-shaped, cast-manganese-bronze vanes are precisely positioned by solid vane linkages connected to the electric actuator.

For units equipped with variable speed drives (VSDs), the capacity control will be achieved by the combined use of variable speed control and pre-rotation vanes (PRV) to provide fully modulating control from maximum to minimum load. For each condition the speed and the PRV position will be automatically optimized to maintain a constant leaving chilled liquid temperature.

## Lubrication system

Lubrication oil is force-fed to all bearings, gears, and rotating surfaces by a variable speed drive pump which operates prior to startup, continuously during operation and during coastdown. A gravity-fed oil reservoir is built into the top of the compressor to provide lubrication during coastdown in the event of a power failure.

A common oil reservoir, separate from the compressor, contains a submersible oil pump, a 2 HP (1.5 kW) pump motor and immersion type oil heater for each compressor. Two 2.7 HP (2 kW) immersion oil heaters are provided, and a thermostatically controlled expansion valve maintains the required oil tem-perature supply from each oil cooler to its compressor. The heaters are thermostatically controlled from the sump oil temperature sensor. Oil is filtered by an externally mounted 1/2 micron, replaceable cartridge, oil filter equipped with service valves. Oil is cooled via a refrigerant-cooled oil cooler, eliminating the requirement for field water pip-ing. The oil side of the oil cooler is provided with service valves. An automatic oil return system recovers any oil that may have migrated to the evaporator. Oil piping is completely factory-installed.

## Motor driveline

The compressor motors are open drip-proof, squirrel-cage, induction type constructed (by others) to Johnson Controls design specifications. Motors rated at 60 Hz operate at 3570 rpm. Motors rated at 50 Hz operate at 2975 rpm.

The open motors are provided with a D-flange, and are factory-mounted to a cast iron adapter mounted on the compressor. This unique design allows the motor to be rigidly coupled to the compressor to provide factory alignment of motor and compressor shafts.

The motor drive shaft is directly connected to the compressor shaft with a flexible disc coupling. The coupling is of all metal construction with no wearing parts to assure long life, and no lubrication requirements to provide low maintenance.

A large, steel terminal box with a gasketed front access cover is provided on each motor for field-connected conduit. There are six terminals (three for medium voltage) brought through the motor casing into the terminal box. Jumpers are furnished for three-lead types of starting. Motor terminal lugs are not furnished. Overload/over current transformers are furnished with remote mounted electromechanical starters only. For chillers supplied with solid state starters or variable speed drives, the current transformers are supplied inside the starter/drive panels.

## Flash economizer (intercooler)

The flash economizer (intercooler) is a single-stage type, consisting of a horizontal pressure vessel with internally mounted baffles and liquid spray pipe, an externally mounted level transmitter located with a liquid level pipe assembly and an external control valve mounted in the liquid outlet to the evaporator. Refrigerant from the condenser, after expanding through the condenser level control valve, enters through the internal spray pipe, where flash gas is removed and channeled through baffles, out the top and on to the economizer compressor section. The remaining liquid feeds out of the economizer through a liquid level control valve to the evaporator.

## Heat exchangers

**Shells:** Evaporator and condenser shells are fabricated from rolled carbon steel plates with fusion welded seams. Carbon steel tube sheets, drilled and reamed to accommodate the tubes, are welded to the end of each shell. Intermediate tube supports are fabricated from carbon steel plates, drilled and reamed to eliminate sharp edges, and spaced no more than 4 ft (1.2 m) apart. The refrigerant side of each shell is designed, tested, and stamped in accordance with ASME Boiler and Pressure Vessel Code, Section VIII – Division I, or other pressure vessel code as appropriate.

**Tubes:** Heat exchanger tubes are state-of-the-art, high-efficiency, internally and externally enhanced type to provide optimum performance. Tubes in both the evaporator and condenser are 3/4 in. (19 mm) O.D. standard or 1 in. (25.4 mm) O.D. copper alloy and utilize the “skip-fin” design, providing a smooth internal and external surface at each intermediate tube support. This provides extra wall thickness (nearly twice as thick) and non work-hardened copper at the support location, extending the life of the heat exchangers. Each tube is roller expanded into the tube sheets providing a leak-proof seal, and is individually replaceable.

**Evaporator:** The evaporator is a shell-and-tube, flooded-type heat exchanger. A distributor trough provides uniform distribution of refrigerant over the entire shell length to yield optimum heat transfer. Aluminum mesh eliminators are located above the tube bundle to prevent liquid refrigerant carry over into the compressor. A 2 1/4 in. (57 mm) diameter liquid level sight glass is conveniently located on the side of the shell to aid in determining proper refrigerant charge. The evaporator shell contains a dual refrigerant relief valve arrangement set at 180 psig (1.34 MPa). A 1 in. (25.4 mm) refrigerant charging valve is provided.

**Condenser:** The condenser is a shell-and-tube type, with a discharge gas baffle to prevent direct high velocity impingement on the tubes. The diffusers provide dynamic pressure recovery and enhanced chiller efficiency. An integral subcooler is located at the bottom of the condenser shell providing highly effective liquid refrigerant subcooling for the highest cycle efficiency. The condenser contains dual refrigerant relief valves set at 235 psig (1.72 MPa). A 4 in. (102 mm) liquid level sight glass is conveniently located on the side of the shell to aid in determining proper refrigerant charge.

**Waterboxes:** Standard waterboxes are compact type and fabricated of steel. The design working pressure is 150 psig (1.14 MPa) and are tested at 225 psig (1.65 MPa). Integral steel water baffles are located and welded within the waterbox to provide the required pass arrangements. Stub-out water nozzle connections with ANSI/AWWA C-606 couplings grooves are welded to the waterboxes. These nozzle connections are suitable for ANSI/AWWA C-606 couplings, welding or flanges, and are capped for shipment. Plugged 3/4 in. (19mm) drain and vent connections are provided in each waterbox, except for marine waterboxes with vertical nozzles where there are drain connections only. Although compact waterboxes are installed on standard units, marine waterboxes are available. See the Accessories and modifications section for details.

## Refrigerant flow control

Refrigerant flow to the evaporator is controlled by the economizer level control. Liquid refrigerant level is continuously monitored to provide optimum subcooler, condenser, and evaporator performance. The economizer level control electronically adjusts to all real-world operating conditions, providing the most efficient and reliable operation of refrigerant flow control.

## Refrigerant isolation valves

Factory-installed isolation valves in the compressor discharge line and refrigerant liquid line are available for the chiller. This allows isolation and storage of the refrigerant charge in the chiller condenser during servicing, eliminating time-consuming transfers to remote storage vessels. Both valves are positive shut-off, assuring integrity of the storage system.

## Isolation mounting

The unit is provided with eight vibration isolation mounts of nominal 1 in. (25 mm) operating height. The pads have a neoprene pad to contact the foundation, bonded to a steel plate. The vibration isolation pads assemblies mount under steel plates affixed to the chiller tube sheets.

## Refrigerant containment

The standard unit is designed as a complete and compact factory-packaged chiller. It has minimum joints from which refrigerant can leak. The entire assembly is thoroughly leak tested at the factory before shipment. The YORK YK-EP chiller includes accessible service valves that facilitate transfer of refrigerant to a remote refrigerant storage/recycling system.

## Paint

Exterior surfaces are protected with one coat of Caribbean blue, durable alkyd modified, vinyl enamel, and machinery paint.

## Shipment

YORK YK-EP centrifugal chillers are designed to keep installation costs low. YK-EP chillers can be shipped using Form 2, Form 3, or Form 7 shipment methods.

- Form 2 shipment allows the chiller to be shipped completely packaged as one assembly and saves on installation time.
- Form 3 shipment requires the two drive lines to ship separate from the shells as three major assemblies.
- Form 7 shipment, for more complex installations, ensures the two drivelines, evaporator, and condenser shells are split apart into four major assemblies.

In all three shipping methods, refrigerant and oil charges are shipped separately, connections are closed/flanged, wiring connections are simple plug-type to ensure simple commissioning using a starter, and heat exchanger refrigerant sides are charged with nitrogen.

## Water flow switches

Thermal-type water flow switches are factory mounted in the evaporator and condenser water nozzles, and are factory wired to the control panel. These solid state flow sensors have a small internal heating element. They use the cooling effect of the flowing fluid to detect when an adequate flow rate is established. The sealed sensor probe is 316 stainless steel, which is suited to high working pressures.

# System flow diagram

**Figure 4: Refrigerant flow through the chiller (cross section)**

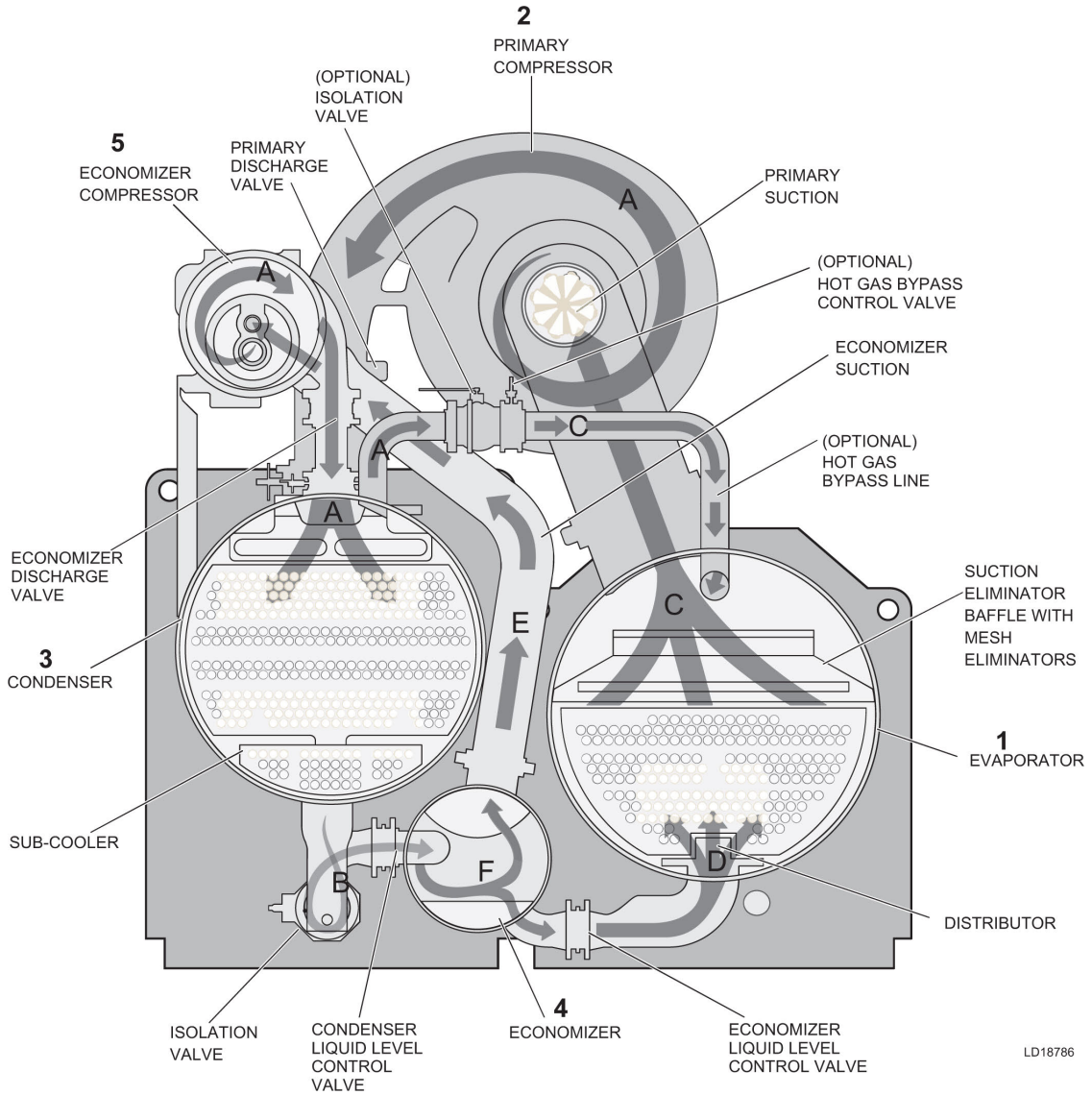


| Item | Description |
|---|---|
| A | High pressure vapor |
| B | High pressure liquid refrigerant |
| C | Low pressure vapor |
| D | Low pressure liquid refrigerant |
| E | Intermediate pressure vapor |
| F | Intermediate pressure liquid refrigerant |

## How it works

The YORK YK-EP chiller operates much the same as the YORK YK Single Stage chiller. The only exception is a small economizer loop to compress partially expanded gas to extend capacity and improve efficiency.

**Step 1. Evaporator**

Liquid refrigerant flows into the evaporator and is distributed to contact a bundle of tubes that carry the chilled liquid for the system. The low pressure liquid refrigerant absorbs heat from the chilled liquid causing the refrigerant to boil. The boiled refrigerant rises to the top of the tube bundle as vapor and passes through a mesh pad that prevents liquid refrigerant droplets from being drawn into the compressor.

**Step 2. Primary Compressor**

The refrigerant vapor that has passed through the mesh pad is drawn up to the compressor. Centrifugal compression is used to pressurize the refrigerant and develop flow. The high pressure refrigerant vapor is then discharged from the compressor to the condenser.

**Step 3. Condenser**

The high pressure refrigerant vapor is distributed across a bundle of tubes carrying cooling liquid in the condenser. The high temperature and high pressure refrigerant vapor rejects heat to the cooling liquid that is passing through the tubes. The cooling liquid will generally later reject its heat to the environment in a cooling tower. When the refrigerant vapor gives up its heat to the cooling liquid, it condenses on the outside of the tubes and drips down to the sub-cooler. The liquid refrigerant passes through the sub-cooler where it rejects some more heat to the cooling liquid as the refrigerant temperature is reduced.

**Step 4. Expansion And Economizer**

The refrigerant liquid from the condenser is partially expanded to a pressure intermediate to the evaporator and condenser. The partially expanded two phase refrigerant is separated to liquid and vapor streams in the economizer. The liquid stream is expanded a second time to repeat the cycle in the evaporator. The vapor stream is drawn out of the economizer by the economizer compressor. Note that the quality of refrigerant delivered to the evaporator, as a result of economizing, extends the refrigerating effect of the flow through the evaporator and primary compressor.

**Step 5. Economizer Compressor**

The economizer compressor draws the refrigerant vapor from the economizer. The efficiency benefit of the cycle is a result of not having to compress this gas over the full head of the chiller system. As in the primary compressor, centrifugal compression is used to pressurize the refrigerant and develop flow. The high pressure vapor refrigerant is then discharged from the economizer compressor to the condenser.

**Figure 5: Refrigerant instrumentation diagram**

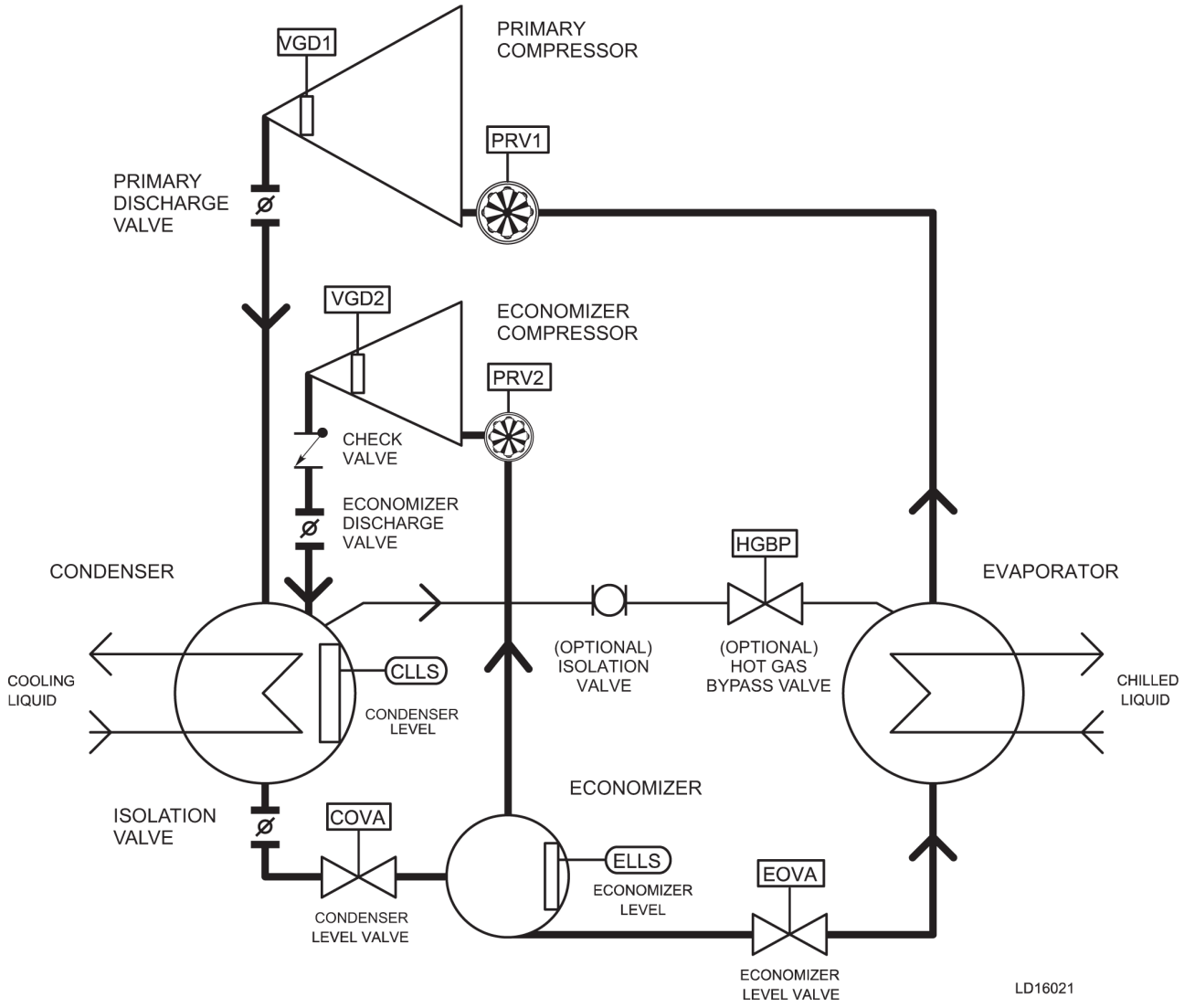

# OptiView™ control center

ⓘ **Note:** Refer to the OptiView™ Control Center operator manual (*Form 160.87-OM1*) for a complete description of features and functionality.

The YORK OptiView Control Center is a factory mounted, wired and tested microprocessor based control system for centrifugal chillers. For the YK-EP, it controls the leaving chilled liquid temperature and limits the motor current via control of the variable geometry diffuser (VGD) and if used, the variable speed drive (VSD).

**Figure 6: OptiView control center**

LD18607

The panel comes configured with a full screen LCD mounted in the middle of a keypad interface with soft keys, which are redefined with one keystroke based on the screen displayed at the time. The LCD allows the presentation of several operating parameters at once. In addition, the operator may view a graphical representation of the historical operation of the chiller as well as the present operation. For the novice user, the locations of various chiller parameters are clearly and intuitively marked. Instructions for specific operations are provided on many of the screens. To prevent unauthorized changes of setpoints and operating conditions, security access is provided with three different levels of access and passwords.

The graphic display also allows information to be represented in both English (temperatures in °F and pressures in psig) and Metric (temperatures in °C and pressures in kPa) mode. The main advantage, however, is that many language options are available.

The control center continually monitors the system operation and records the cause of any shutdowns, either safety, cycling, or normal. This information is recorded in memory and is preserved even through a power failure condition. The user may recall it for viewing at any time. During operation, the user is continually advised of the operating conditions by various status and warning messages. In addition, it may be configured to notify the user of certain conditions via alarms. The control center expands the capabilities of remote control and communications. By providing a common networking protocol through the Building Automation System (BAS), YORK Chillers not only work well individually, but also as a team. This new protocol allows increased remote control of the chiller, as well as 24-hour performance monitoring through a remote site. In addition, compatibility is maintained with the present network of BAS communications. The chiller also maintains the standard digital remote capabilities.

Both of these remote control capabilities allow for the standard Energy Management System (EMS) interface:

1. Remote Run/Stop
2. Remote Leaving Chilled Liquid Temperature Setpoint adjustment (0 VDC to 10 VDC, 2 VDC to 10 VDC, 0 mA to 20 mA, or 4 mA to 20 mA) or Pulse Width Modulation
3. Remote Current Limit Setpoint adjustment (0 VDC to 10 VDC, 2 VDC to 10 VDC, 0 mA to 20 mA, or 4 mA to 20 mA) or Pulse Width Modulation
4. Remote READY TO START Contacts
5. Safety Shutdown Contacts
6. Cycling Shutdown Contacts

The following are few examples of the information displayed on some of the more important screens:

## Home screen

The home screen gives a general overview of common chiller parameters.

**Figure 7: Home screen**

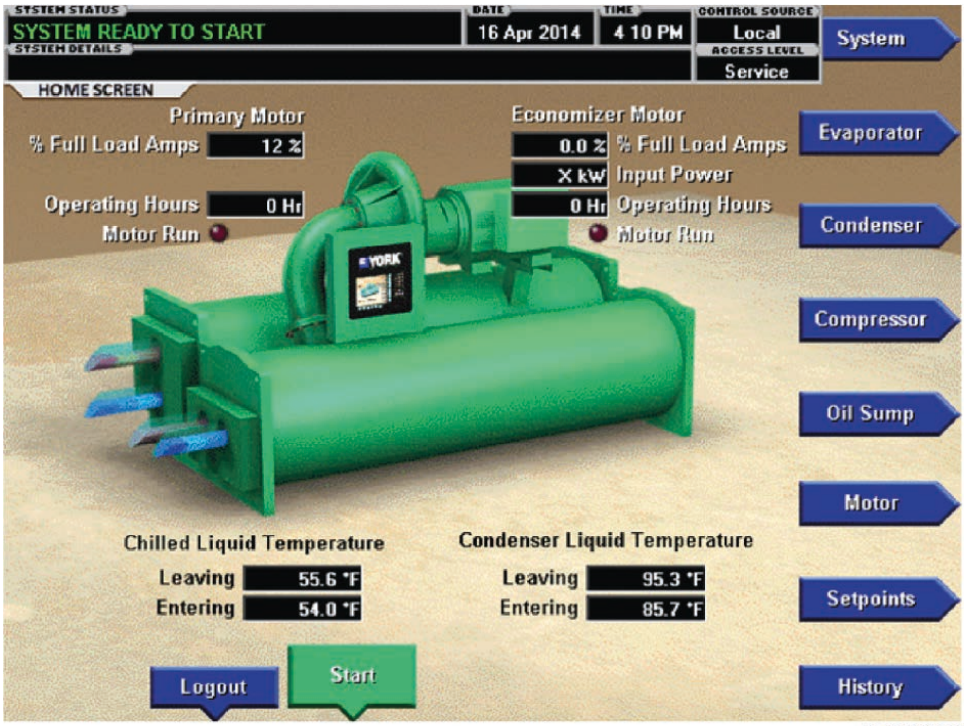


LD19626

## System screen

The system screen gives a general overview of common chiller parameters.

**Figure 8: System screen**

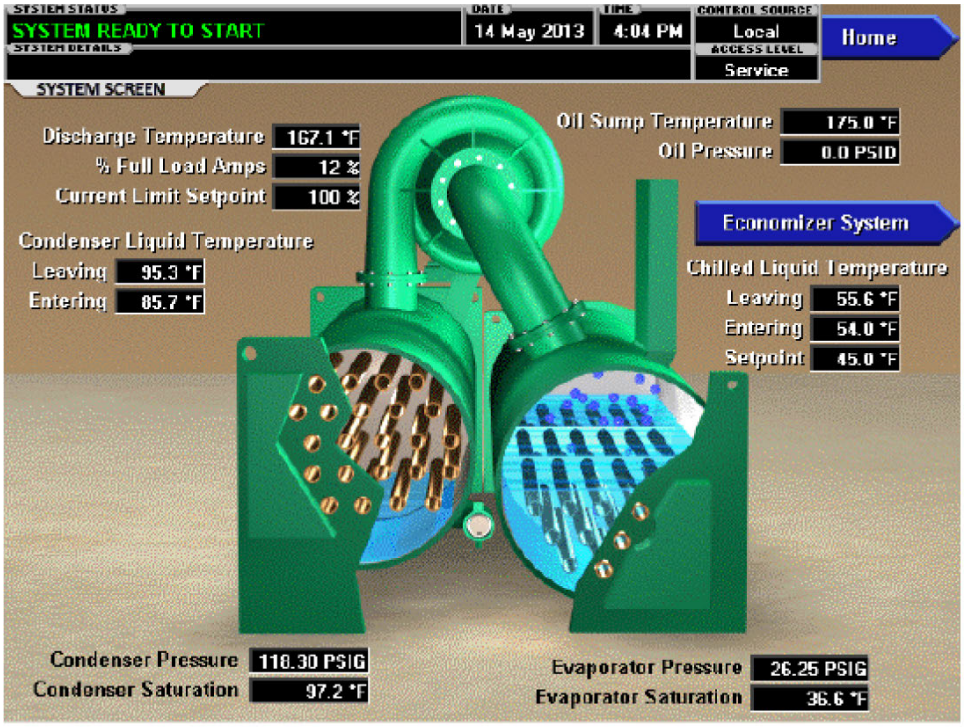


LD19523

## Evaporator screen

The evaporator screen displays a cutaway view of the chiller evaporator. All setpoints relating to the evaporator side of the chiller are maintained on this screen. Animation of the evaporation process indicates whether the chiller is presently in a RUN condition (bubbling) and liquid flow in the pipes is indicated by alternating shades of color moving in and out of the pipes.

**Figure 9: Evaporator screen**

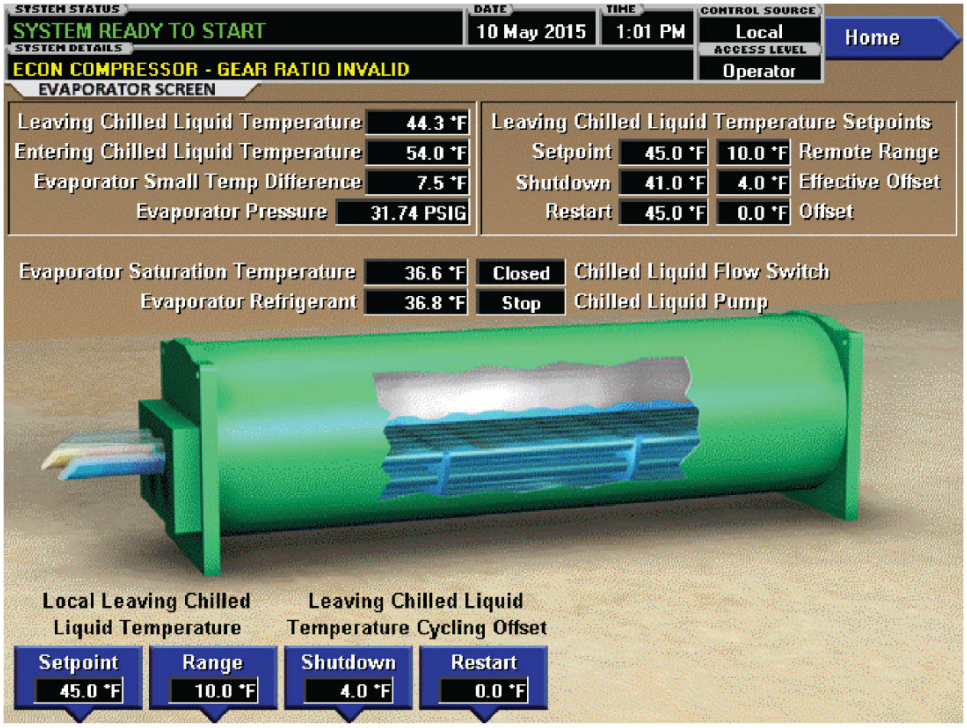


LD20158

## Condenser screen

The condenser screen displays a cutaway view of the chiller condenser. All setpoints relating to the condenser side of the chiller are maintained on this screen. Animation indicates condenser liquid flow.

**Figure 10: Condenser screen**

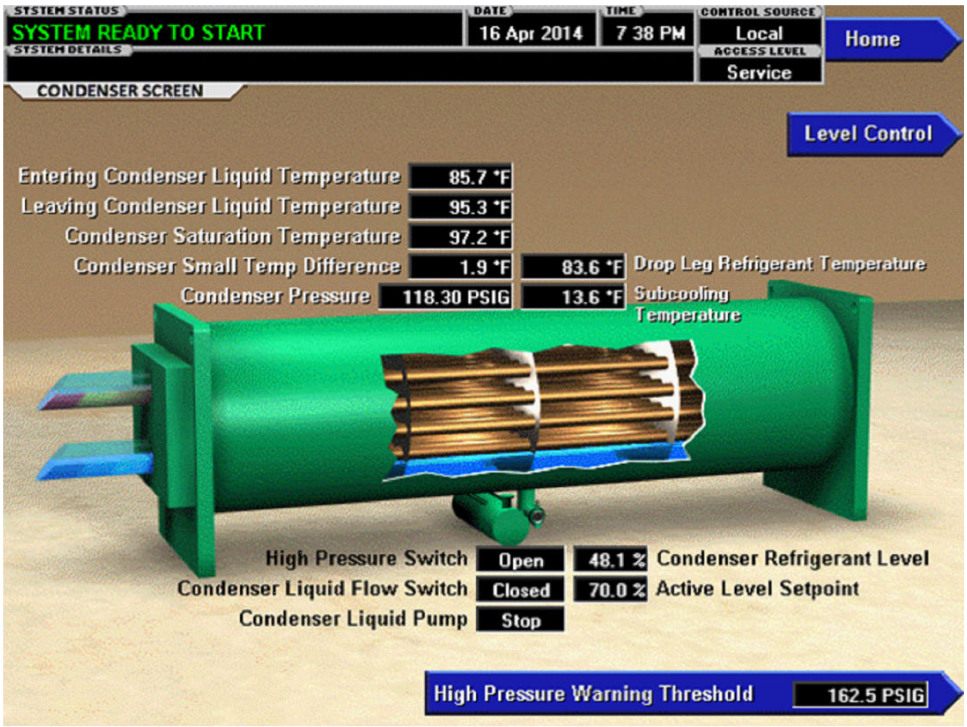


LD19647

## Economizer system screen

The economizer system screen displays a cutaway of the chiller economizer.

**Figure 11: Economizer system screen**

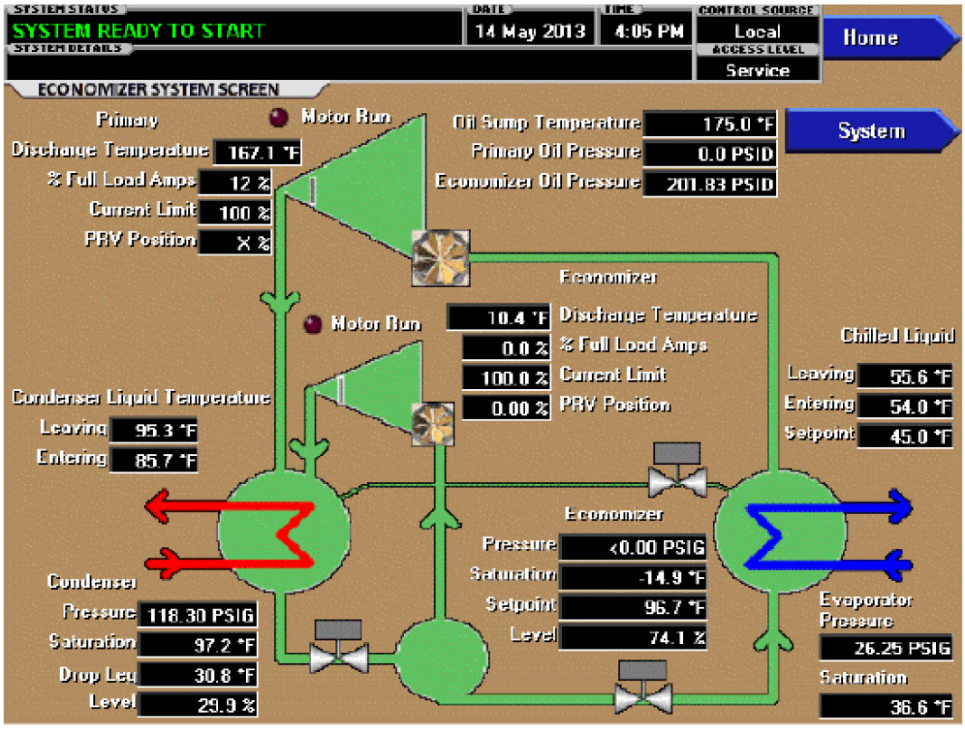


LD19526

## Compressor screen

The compressor screen displays a cutaway view of the chiller compressor, revealing the impeller, and shows all conditions associated with the compressor. Animation of the compressor impeller indicates whether the chiller is presently in a RUN condition. This screen also serves as a gateway to the hot gas bypass, surge protection, compressor capacity cycling setup subscreens, and viewing and calibration of individual compressor functions.

**Figure 12: Primary compressor screen**

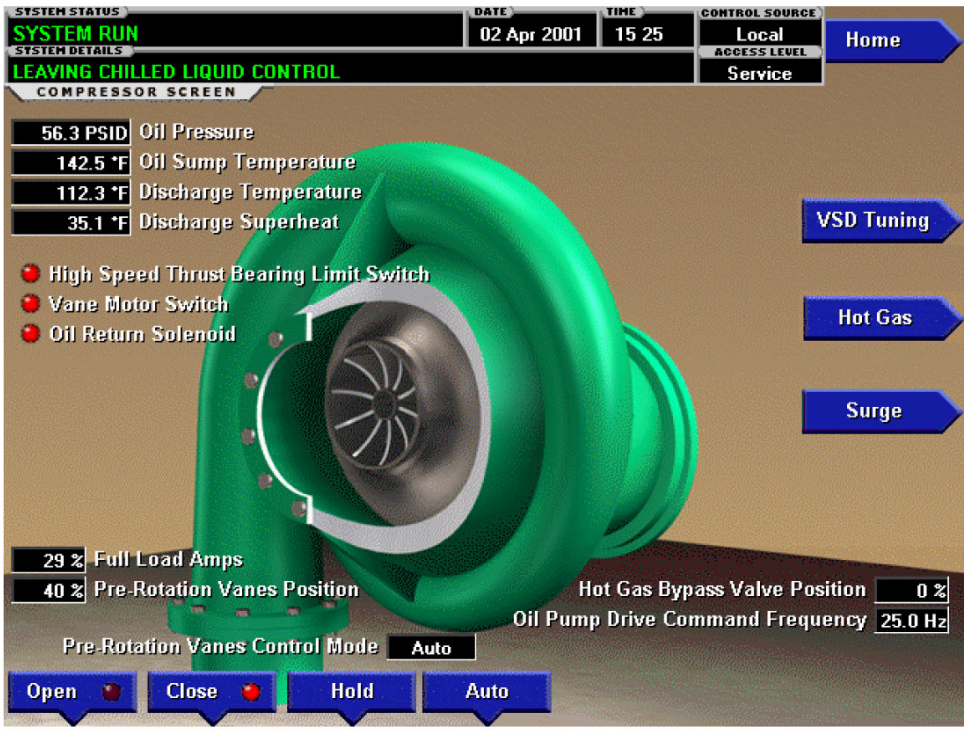


00549cVIP

**Figure 13: Economizer compressor screen**

LD19628

## Primary starter screen

The primary starter screen displays all information related to the electromechanical starter, solid state starter, or variable speed drive screen for the primary starter, depending on chiller configuration.

**Figure 14: Remote mounted medium and high voltage electromechanical starter**

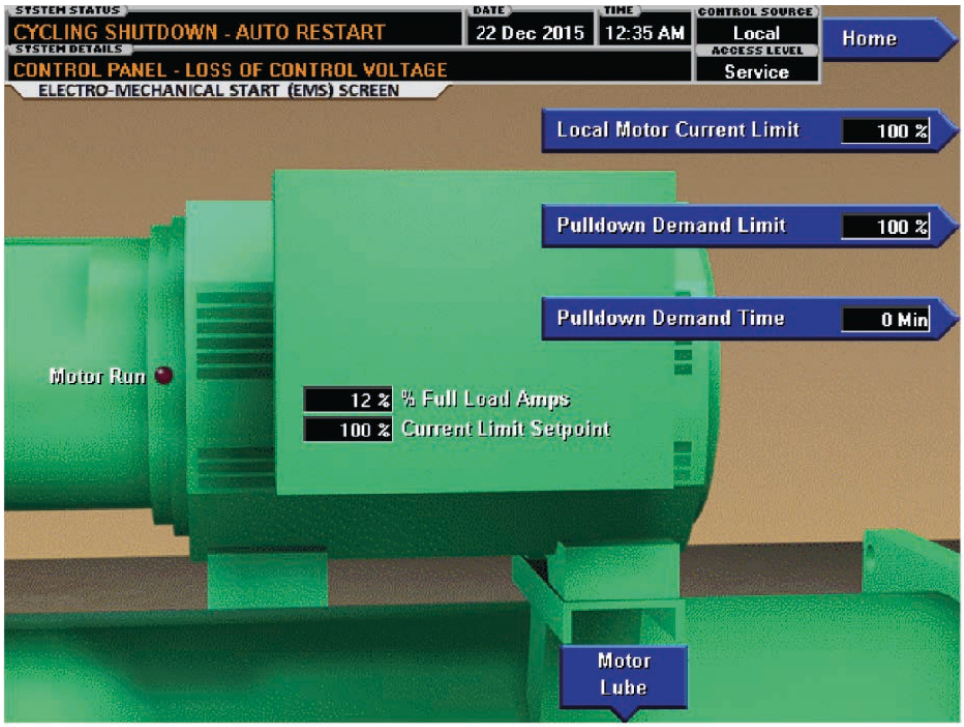


LD20151

**Figure 15: Unit and remote mounted medium and high voltage solid state starter**

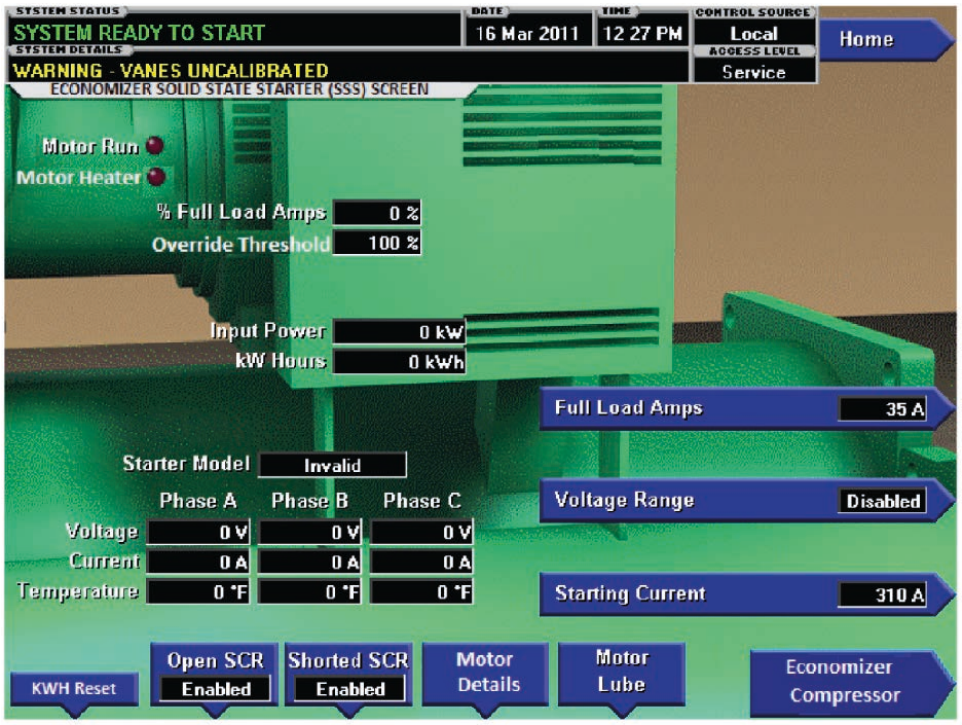


LD20154

**Figure 16: Remote mounted medium and high voltage variable speed drive**

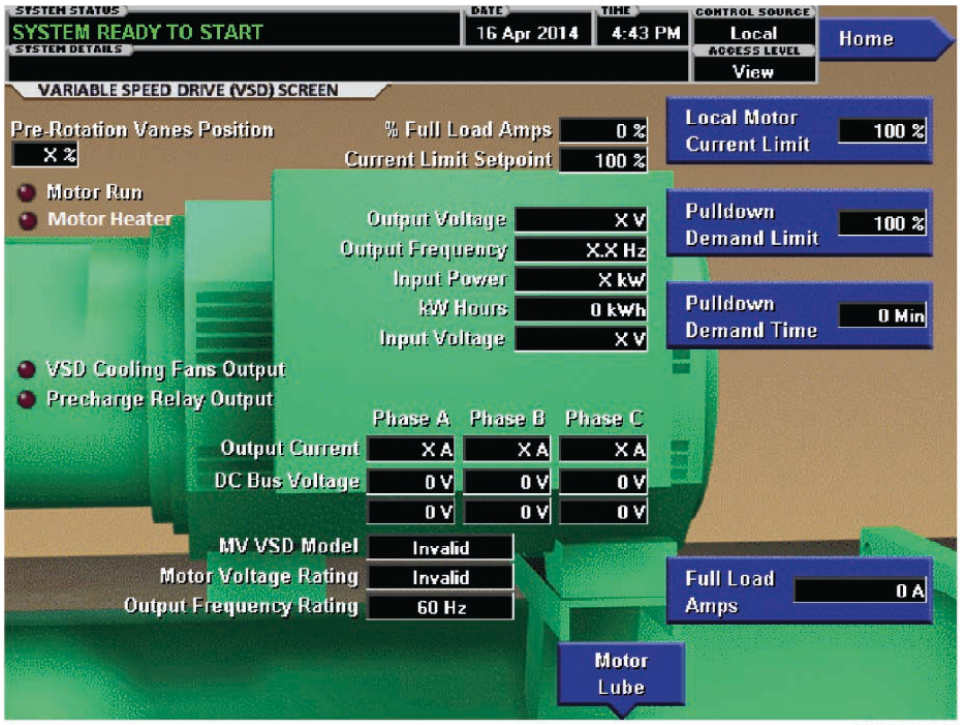


LD20155

## History screen

The history screen allows the user to browse through the faults. In order to get a more thorough reporting of the system conditions at the time of the recorded shutdown, the user would then move to the history details subscreen.

**Figure 17: History screen**

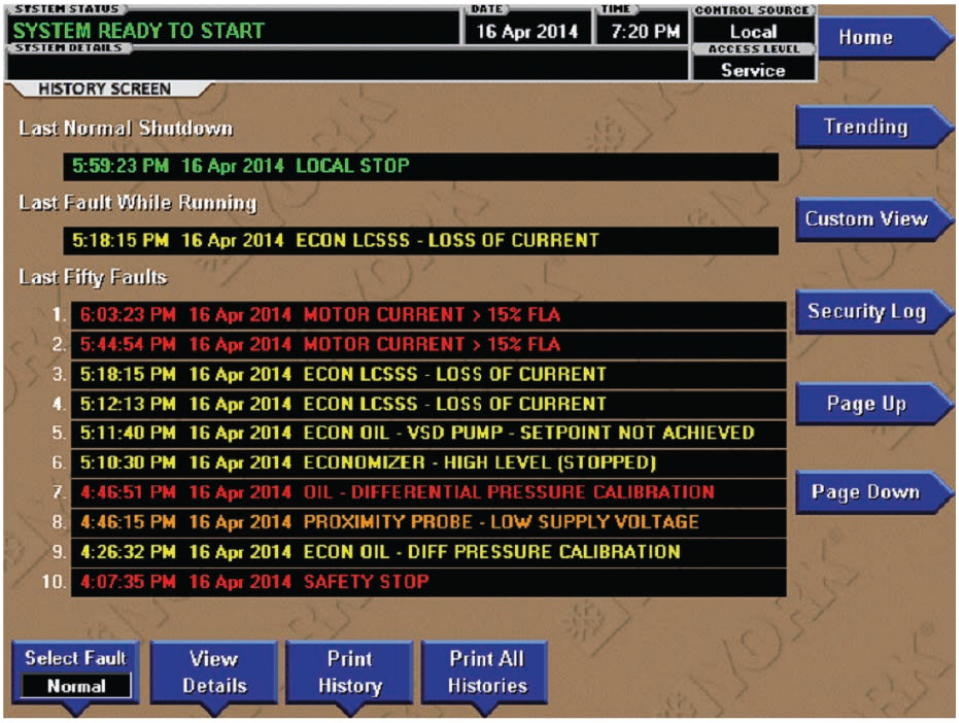


LD19649

## Setpoints screen

The setpoints screen provides a convenient location for programming the most common chiller control setpoints. Changing setpoints and setup requires sufficient password access. This screen also serves as a gateway to a subscreen for defining the setup of general system parameters.

**Figure 18: Setpoints**

LD19533

## Operations screen

The operations screen allows you to define the general parameters that are associated with the operation of the chiller.

**Figure 19: Operations screen**

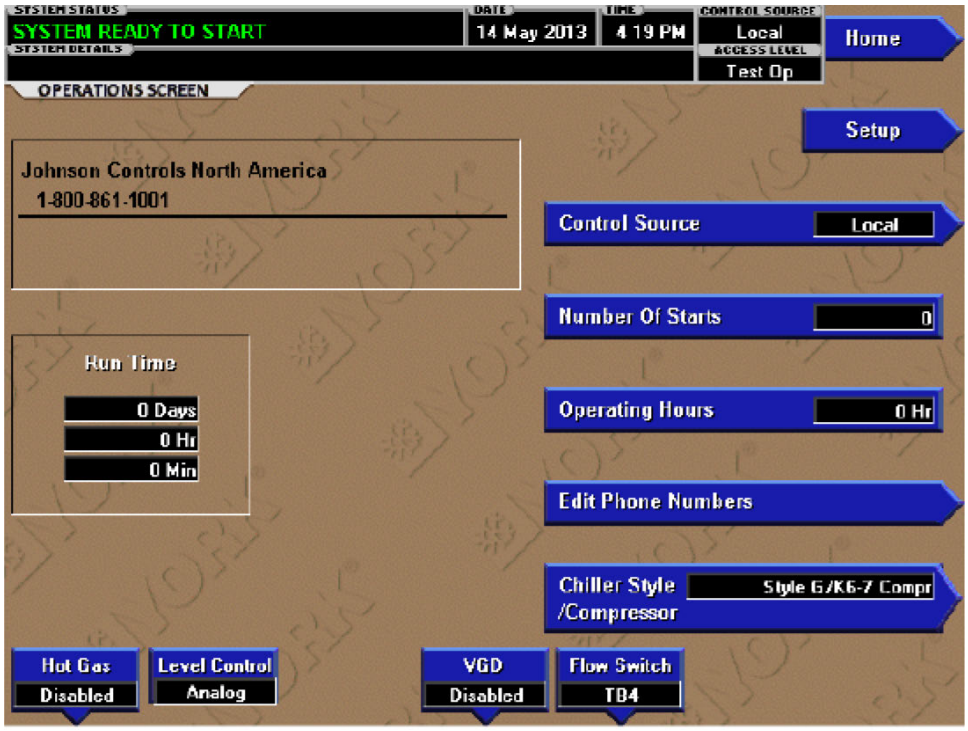


LD19534

## Schedule screen

The schedule screen allows the user to program the start and stop times for any day of the week up to six weeks in advance. The user can also define a standard set of start and stop times that are used every week or specify exceptions to create a special week.

**Figure 20: Schedule screen**

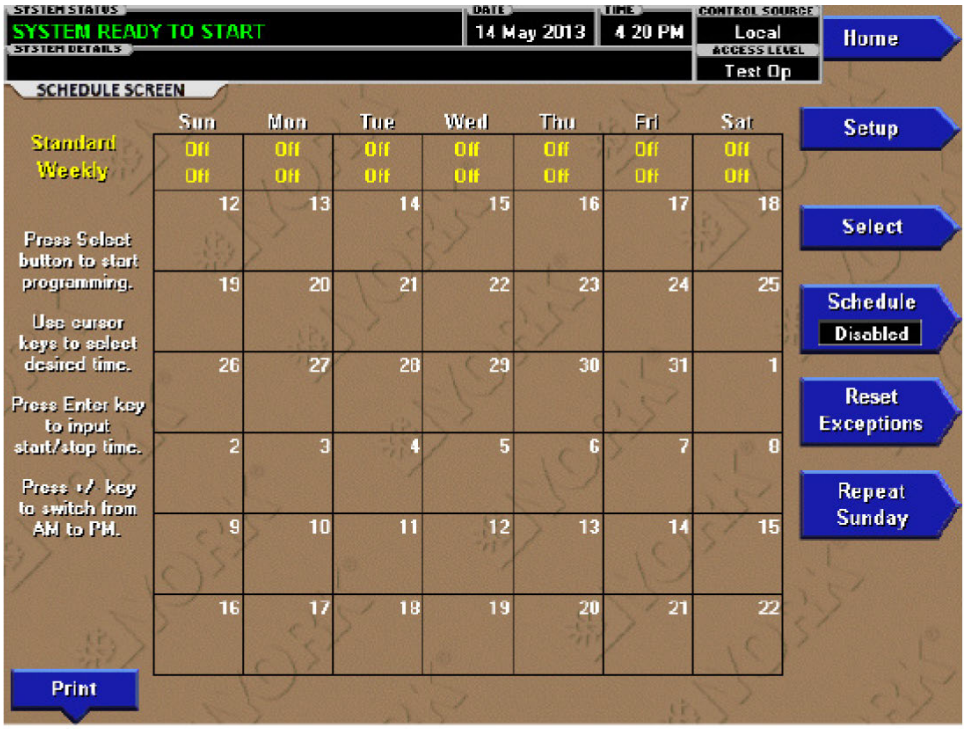


LD19535

## User screen

The user screen allows you to set the language for the chiller to display and defines the unit of measurement.

**Figure 21: User screen**

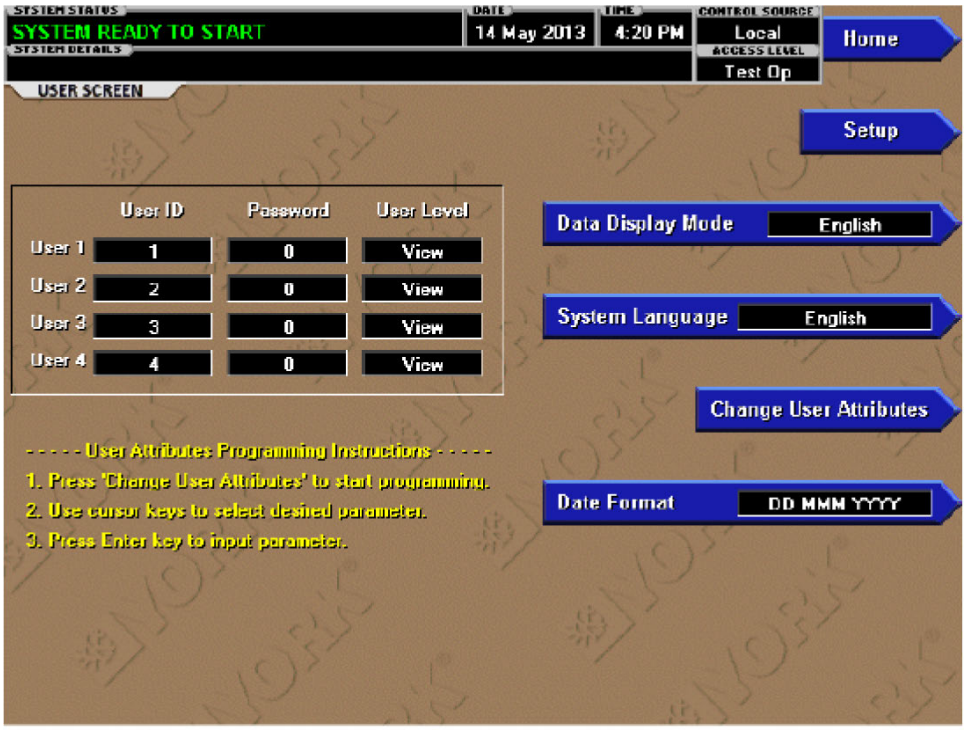


LD19536

## Sales order screen

The sales order screen displays the order parameters. This information is loaded at the factory or by the installation/service technician.

**Figure 22: Sales order screen**

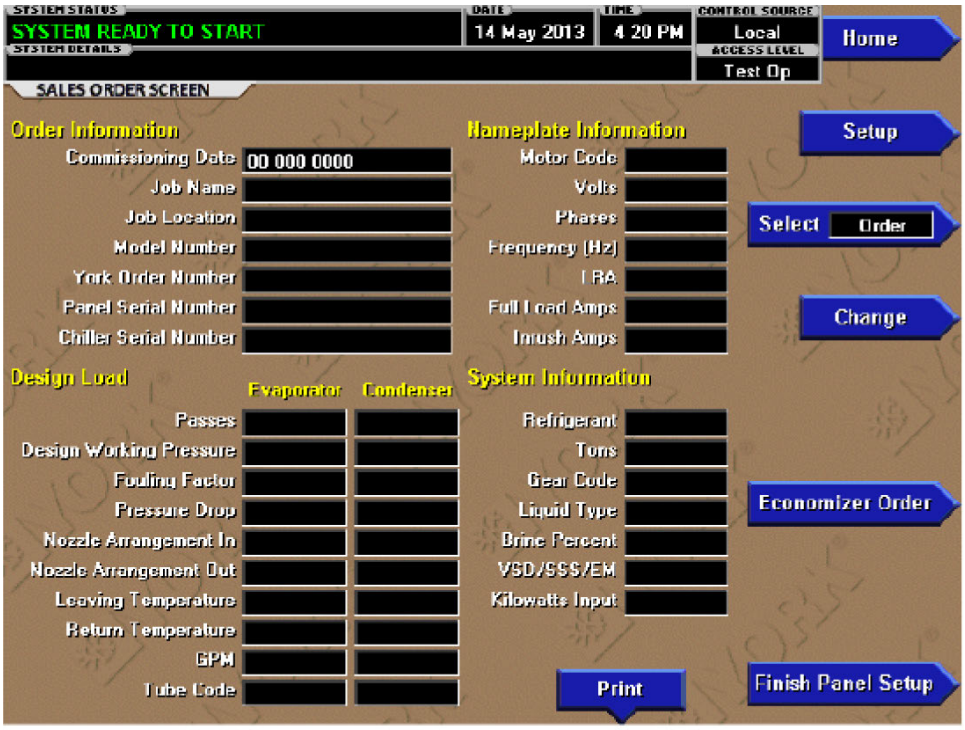


LD19537

## Trending screen

On the trending screen, up to six user-selected parameters selected from a list of over 140, can be plotted in a time line graph format. The graph can be customized to record points once every second up to once every hour. There are two types of charts that can be created: a single or continuous screen. The single screen collects data for one screen width (450 data points across the X-axis) then stops. The continuous screen keeps collecting the data but the oldest data drops off the graph from left to right at the next data collection interval. For ease of identification, each plotted parameter, title, and associated Y-axis labeling is color coordinated.

**Figure 23: Trending screen**

LD19232

# Starters and drives

## Compressor motor starter and drives

The YORK YK-EP is available with a variety of starter options for the primary compressor motor. The economizer compressor motor is always equipped with a unit mounted low voltage solid state starter (LVSSS).

**Table 1: YORK YK-EP compressor motor starter options (primary)**

| Starter options | VSD | Solid state starter (SSS) | | Across-the-line (EMS) | Auto transformer (EMS) | Primary reactor (EMS) |
|---|---|---|---|---|---|---|
| **Assembly** | Remote mounted | Unit mounted | Remote mounted | Remote mounted | Remote mounted | Remote mounted |
| **Voltage** | Medium/high | Medium | Medium/high | Medium/high | Medium/high | Medium/high |
| **60 Hz** | 2,300 to 13,800 | 2,300 or 4,160 | 2,300 to 13,200 | 2,300 to 13,200 | 2,300 to 13,200 | 2,300 to 13200 |
| **50 Hz** | 3,300 to 11,000 | 3,300 | 2,300 to 11,000 | 2,300 to 11,000 | 2,300 to 11,000 | 2,300 to 11,000 |

## Remote mounted medium and high voltage variable speed drive (primary)

When a YK-EP centrifugal chiller is equipped with a VSD, it incorporates advanced Adaptive Capacity Control logic, which continually optimizes chiller operation. It closely examines critical operating parameters, and then determines the most efficient way to operate. In addition, it allows optimized savings when using intelligent control strategies, such as chilled-water reset. Adaptive Capacity Control logic also accommodates the characteristics of the refrigerant used in the chiller.

The VSD is designed to vary the compressor motor speed by controlling the frequency and voltage of the electrical power to the motor. The capacity control logic automatically adjusts motor speed and compressor pre-rotation vane position independently for maximum part load efficiency by analyzing information fed to it by sensors located throughout the chiller.

The VSD is available for medium and high incoming line voltages applications.

**Table 2: Remote mounted M/HVVSD**

| Starter options | Remote mounted M/HVVSD | | | | | | |
|---|---|---|---|---|---|---|---|
| **60 Hz** | 2,300 | 3,300 | 4,000 | 4,160 | 6,600 | 12,470 | 13,800 |
| | O | O | X | X | O | O | O |
| **50 Hz** | 2,300 | 3,300 | 4,000 | — | 6,600 | 10,000 | 11,000 |
| | O | X | § | — | O | O | O, § |

ⓘ **Note:**

X= Standard option

O= The unit will use a 4,000 or 4,160 V-60 Hz unit motor.

§= Requires a Special Quote (SQ). The unit will use a 4,000 V-50 Hz unit motor.

**Figure 24: Remote mounted MVVSD**

Id19233

The VSD was specifically developed for commercial air-conditioning applications. No one matches the experience of Johnson Controls in the application of variable speed drive technology to chillers. Since pioneering the concept in 1978, Johnson Controls has installed more variable speed drive chillers than all other chiller manufacturers combined.

Variable speed drives will save energy in both single-chiller installations and multiple-chiller installations. In multiple-chiller installations, cycling chillers off as the building load falls will result in higher loads on the remaining chillers. This would seem to reduce the opportunity for drives to save energy. However, even though chiller loads remain high, entering condenser-water temperature has most likely fallen. And, reductions in entering condenser water temperature offer a far greater potential to enhance chiller efficiency than do load reductions. The VSD delivers major energy savings in multiple-chiller plants, too.

The variable speed drive is factory-packaged and configured for easy remote mounting. It is designed to vary the compressor motor speed by controlling the frequency and voltage of the electrical power to the motor. The capacity control logic automatically adjusts motor speed and compressor pre-rotation vane position independently for maximum part load efficiency by analyzing information fed to it by sensors located throughout the chiller

The variable speed drive is mounted in a NEMA-1 enclosure and comes with a certification label from a nationally recognized testing laboratory. The connection points between the drive and chiller are factory labeled. Electrical lugs for incoming power wiring are NOT provided.

The variable speed drive provides automatic displacement power factor correction to 0.98 or better at all load conditions. Separate displacement power factor correction capacitors are not required.

Standard features include the following:

- A lockable door interlocked disconnect switch
- UL listed ground fault protection
- Overvoltage and undervoltage protection
- Three-phase sensing motor over-current protection
- Single-phase protection
- Insensitive to phase rotation
- Over-temperature protection
- Digital readout at the control center of the following:
  - Output frequency
  - Three-phase output voltage

- Three-phase output current
- Input power (kW)
- Self diagnostic service parameters
- Kilowatt-hours (kWH)
- Input kVa
- Total power-factor
- Three-phase input voltage
- Three-phase input current
- Self diagnostic service parameters

The remote mounted M/HVVSD delivers reliable operation and improves the off-design performance. In case of 50 Hz countries, you can save more, reducing the initial cost, because the MVVSD will convert the frequency from 50 Hz to 60 Hz. As a result, the remote mounted M/HVVSD can handle more amps with the same hardware. In addition, a potential lower cost is realized in 4160 V (60 Hz) units versus 3300 V (50 Hz) units.

The 24-pulse phase shifting isolation transformer provides protection for the drive. It also acts as a buffer between power line surges and acts as a filter to stop these disturbances from reaching sensitive electronic devices.

The Johnson Controls transformer also protects the building's electrical system from unlikely drive failures which may cause a surge or disturbance on the line that is feeding the system.

Johnson Controls' front-end transformer also provides the ability to match incoming line voltage to the motor voltage in use without further penalizing efficiency. Johnson Controls offers the widest input voltage range for remote mounted M/HVVSD chillers in the industry, such as 11000 V, 12470 V, or 13800 V.

**Figure 25: Typical OptiSpeed medium-voltage drive from 3.3 kV and 4.16 kV input**

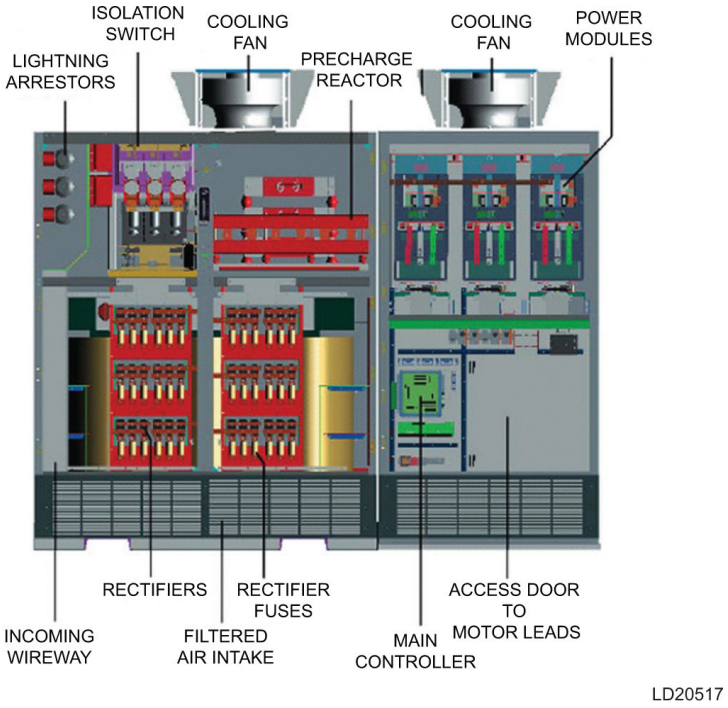

**Figure 26: Typical OptiSpeed high-voltage drive from 6.6 kV to 13.8 kV input**

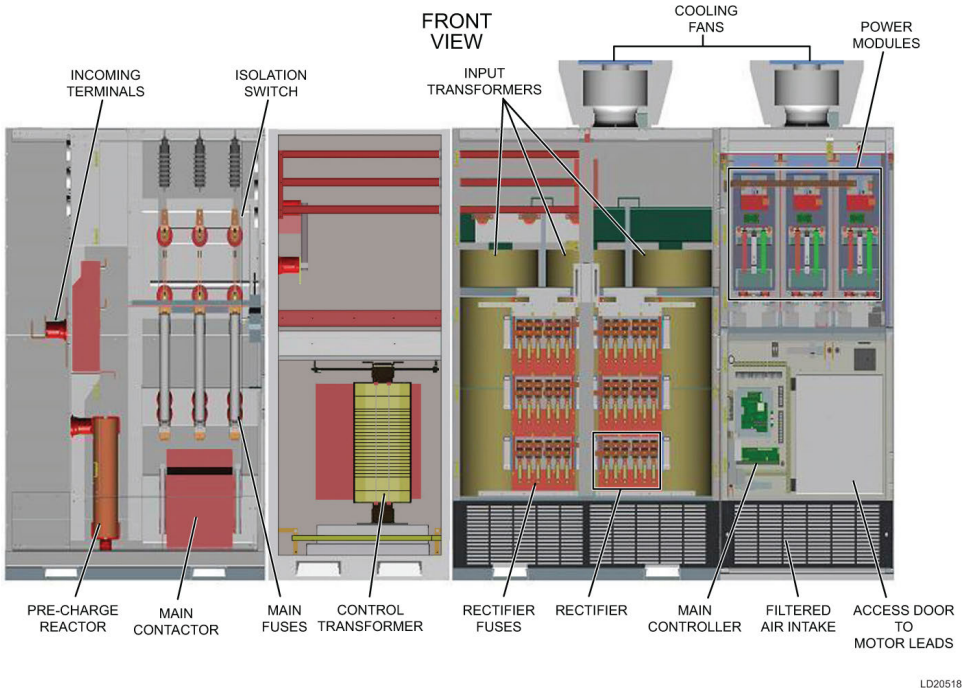


**Table 3: Remote mounted HVVSD**

| Starter type | Advantages |
|---|---|
| **Remote mounted HVVSD** | • Lowest chiller life cycle through part load energy savings.<br>• Application-specific designs enable efficient, precise load control and seamless integration with equipment control panel and BAS.<br>• Soft start with input current less than full load current.<br>• Smooth acceleration reduces stresses on motor and driveline.<br>• Reduces compressor sound levels at most operating conditions.<br>• Rugged and reliable with no moving parts.<br>• Helps buildings comply with IEEE Std. 519. No optional filter needed.<br>• Multi-level PWM output closely simulates a true sine wave, allowing the use of standard motors and bearings. |

## Unit and remote mounted medium voltage solid state starter (primary)

The unit and remote mounted medium voltage solid state starter (MVSSS) is a reduced voltage in-line bypass starter that controls and maintains a constant current flow to the motor during startup. Power and control wiring between the starter and the chiller for the unit mounted version is factory-installed. The MVSSS is available for 2,300 V to 13,200 V (see Table 4). The starter enclosure is NEMA-1, with a hinged access door with lock and key. Electrical lugs for incoming power wiring are not provided.

**Table 4: Unit and remote mounted MVSSS**

| **Medium voltage solid state starter options** | | | | | | | |
|---|---|---|---|---|---|---|---|
| **60 Hz** | **Remote mounted MVSSS** | | | | | | |
| | 2,300 | 3,300 | 4,000 | 4,160 | 6,600 | 12,470 | 13,200 |
| | O | O | O | O | O | O | O |
| | **Unit mounted MVSSS** | | | | | | |
| | 2,300 | 3,300 | 4,000 | 4,000 | — | — | — |
| | X | X | X | X | — | — | — |
| **50 Hz** | **Remote mounted MVSSS** | | | | | | |
| | 2,300 | 3,300 | — | — | 6,600 | 10,000 | 11,000 |
| | O | O | — | — | O | O | O |
| | **Unit mounted MVSSS** | | | | | | |
| | — | 3,300 | — | — | — | — | — |
| | — | X | — | — | — | — | — |

**Note:**

X= Standard option

O= Require a Special Quote (SQ)

**Figure 27: Unit mounted MVSSS**

LD13585

Standard features include digital readout at the control center of the following:

- Display only
  - Three-phase input voltage
  - Three-phase current
  - Input Power (kW)
  - Killowatt-Hours (kWh)
  - Starter Model
  - Motor Run (LED)
  - Motor Current % Full Load Amps
  - Current Limit Setpoints
  - Pulldown Demand Time Left
- Programmable
  - Local Motor Current Limit
  - Pulldown Demand Limit
  - Pulldown Demand Time

Other features include the following:

- Low line voltage
- 115 V control transformer
- Three-leg motor current sensing overloads
- Phase rotation and single-phase failure protection
- High temperature safety protection
- Motor current imbalance and under-voltage safeties
- Open and shorted SCR protection
- Momentary power interruption protection

The unit mounted MVSSS is air cooled generating about the same heat as an auto-transformer E-M starter. Ground fault protection and surge protection are also standard features. The 50,000 A short circuit withstand rating is in accordance with UL Standard 508.

**Table 5: Unit mounted MVSSS**

| Starter type | Advantages |
|---|---|
| **Unit mounted MVSSS** | • Smooth, controlled start profile.<br>• Unit mounted, factory wired and tested.<br>• Rugged and reliable with no moving parts.<br>• Application-specific designs enable seamless integration with equipment control panel and BAS. |

## Remote mounted medium and high voltage electromechanical starter (primary)

A remote mounted medium and high voltage electromechanical starter (M/HVEMS) for the primary compressor motor is available, selected for proper size and type for job requirements and in accordance with YORK Engineering Standard (R-1206) for Starters. The starter assembly has contactor and accessories for controlling the primary compressor motor.

## Characteristics

Until the development of the solid state starter, all centrifugal chillers required the use of starters using electromechanical contactors, which are limited to operating totally ON, or totally OFF. There was no alternative to this mechanical equipment with its inability to control applied voltage or power. This contrasts markedly with solid state starters, which automatically maintain a predetermined current during starting, regardless of variations in line voltage or motor load, to give optimum acceleration without surges. Even with the addition of transformers, reactors, resistors and additional contactors, timers and relays, the mechanical controllers offer limited adjustment, no positive control during starting and impose an objectionable transition spike. Some also require modified motors. A field-installed, electromechanical compressor motor starter is available, selected for proper size and type for job requirements and in accordance with Johnson Controls Engineering Standard (R-1206) for Starters.

The most common failure mode of mechanical contactors is OFF. This occurs due to the coil open-circuiting or failure of a pole to make an electrical contact when it closes. However, failure in the ON mode is not completely uncommon and can be a more dramatic type of failure, particularly if this failure mode exists at the same time that equipment safety controls are demanding a shutdown.

When contacts are made, the current builds up to its maximum value from zero, but when contacts are separated the current tends to flow through the gap formed, causing an arc. This arcing depends upon the voltage between the separating contacts. For medium voltage the use of vacuum contactors mitigates this problem somewhat by providing an environment to extinguish the arc. In the alternating current circuit, the separation of contacts may take place when the current is zero or maximum or at any value in between. An alternating current passes through zero and reverses its polarity twice during each cycle. If two or more contacts, one in each leg of a polyphase system, are separated simultaneously, the current values in each varies. In a three-phase system, if one contact has zero current when opened, the other two contacts will have 86.6% of their maximum values, as an example. Additionally, when inductive circuits are broken, the voltage is increased at the contacts due to the counter (induced) EMF of the circuit. The instant the contacts separate, the voltage between them momentarily rises from zero to the maximum of the circuit, or higher if inductance is present in the circuit. In practice, every time the contacts close, they bounce. When they bounce, they arc. The arcing that occurs as the contacts make or break may result in rapid and excessive erosion of the contacts, causing prematurely short contact life.

YORK chillers are designed for use with the following types of electromechanical starters, here briefly described.

**Table 6: Remote mounted M/HVEMS**

| Starter options | Remote mounted M/HVEMS (across-the-line, auto transformer, primary reactor) | | | | | | |
|---|---|---|---|---|---|---|---|
| **60 Hz** | 2,300 | 3,300 | 4,000 | 4,160 | 6,600 | 12,470 | 13,800 |
| | X | X | X | X | X | X | X |
| **50 Hz** | 2,300 | 3,300 | — | — | 6,600 | 10,000 | 11,000 |
| | X | X | — | — | X | X | X |

ⓘ **Note:** X = Standard option

**Across-the-Line (ACL):** These are the simplest and lowest-cost starters available. They apply full voltage to the three motor leads at the instant of starting. Since inrush is 100% of LRA and starting torque is 100%, this is the roughest type of starting on the motor and drive-line. In physical size, the ACL is the smallest of electromechanical starters and there is no transition surge. In most areas, utilities will not permit the use of this type of starter for chiller-size motors because of their large current draw on startup.

**Auto-Transformer (AT):** These starters are reduced-voltage starters. Transformers are used to step down the voltage to the motor during startup. The result is reduced inrush current and starting torque at the level of 42% or 64% depending upon whether 65% or 80% voltage taps are used. They provide closed transition (with three-lead motors) with reduced line disturbance.

**Primary Reactor:** These starters are reduced-voltage starters. Transformers are used to step down the volt-age to the motor during startup. The result is reduced starting torque at the level of 42% or 64%, but with reduced inrush current of 65% or 80% depending upon whether 65% or 80% voltage taps are used. They provide closed transition (with three-lead motors) with reduced line disturbance.

## Unit mounted low voltage solid state starter (economizer)

YK-EP centrifugal chillers mandate the use of a unit mounted low voltage solid state starter (LVSSS) for the economizer motor. The unit mounted LVSSS is compact and mounted on the unit. Power and control wiring between the starter and the chiller are factory-installed. Available for 380 V to 480 V the starter enclosure is NEMA-1, with a hinged access door with lock and key. Electrical lugs for incoming power wiring are provided.

**Table 7: Unit mounted LVSSS - economizer**

| Starter type | 60 Hz | | | | 50 Hz | | |
|---|---|---|---|---|---|---|---|
| Unit mounted LVSSS | 380 V | 440 V | 460 V | 480 V | 380 V | 400 V | 415 V |
| | X | X | X | X | X | X | X |

ⓘ **Note:** X=Available

Standard features include digital readout at the Control Center of the following:

- Display only
  - Three-phase input voltage
  - Three-phase current
  - Input Power (kW)
  - Killowatt-Hours (kWh)
  - Starter Model
  - Motor Run (LED)
  - Motor Current % Full Load Amps
  - Current Limit Setpoints
  - Pulldown Demand Time Left
- Programmable
  - Local Motor Current Limit
  - Pulldown Demand Limit
  - Pulldown Demand Time

Other features include the following:

- Low line voltage
- 115 V control transformer
- Three-leg, motor-current-sensing overloads
- Phase rotation and single-phase failure protection
- High temperature safety protection
- Motor current imbalance and under-voltage safeties
- Open and shorted SCR protection

- Momentary power interruption protection.

The unit mounted LVSSS is cooled by a closed-loop, fresh-water-circuit consisting of a water-to-water heat exchanger and a fractional horsepower circulating pump. All interconnecting water piping is factory-installed and rated for 150 psig (10.3 barg) working pressure. Lockable electronic trip circuit UL listed circuit breaker with integral ground fault protection is available with short circuit withstand ratings of:

- 65 kA for 7 L and 14 L - 380 V to 480 V (60 Hz), 380 V to 415 V (50 Hz) models
- 22 kA for 7 L models
- 35 kA for 14 L models

**Figure 28: Unit mounted LVSSS (economizer)**

LD30323

# Accessories and modifications

## BAS remote control

A communication interface permitting an exchange of chiller data with a BACnet MS/TP, Modbus RTU, LONworks, or N2 Metasys network is available with an optional E-Link® Gateway. The Johnson Controls E-Link Gateway mounts conveniently inside the Optiview™ panel and allows remote BAS networks to monitor values and issue commands to the chiller to control operation.

## Dual oil filter

Dual oil filters with a multi-port changeover valve and manual shutoff valves are optional to allow changing of one filter while the chiller is operating.

## Factory insulation of evaporator

Factory applied thermal insulation of the flexible, closed cell plastic type, 3/4 in. (19 mm) thick is attached with vapor proof cement to the evaporator shell, tube sheets, suction connection, and (as necessary) to the auxiliary tubing. Not included is the insulation of waterboxes and nozzles. This insulation will normally prevent condensation in environments with relative humidities up to 75% and dry bulb temperatures ranging from 50°F to 90°F (10°C to 32.2°C). 1 1/2 in. (38 mm) thick insulation is also available for relative humidities up to 90% and dry bulb temperatures ranging from 50°F to 90°F (10°C to 32.2°C).

## Knock-down shipment

The YORK YK-EP chiller can be shipped diassembled into major subassemblies (evaporator, condenser, driveline, etc.) as required to rig into tight spaces. This is particularly convenient for existing buildings where equipment room access does not allow rigging a factory packaged chiller.

## High ambient temperature

Chiller modifications are available to allow for installation in areas where the ambients exceed 122°F (50°C). Special drive motors are required above 104°F (40°C). Evaporator design pressures must be increased for ambient temperatures above 112.8°F (45°C). The control panel is suited for 122°F (50°C) ambient. Unit mounted medium voltage solid state starters must be derated and/or modified above 110°F (43.3°C). The remote mounted M/HVVSD and M/HVSSS options must be de-rated above its standard 104°F (40°C) limit.

## High voltage motors

High voltage motors from 6,000 V to 13,800 V (60 Hz) and 6,000 V to 11,000 V (50 Hz) are available.

## Hinges and davit arms

Hinges and/or davit arms are available to ease servicing the chiller. Hinges on the nozzle end of a compact waterbox still require that facility water piping be disconnected.

## Marine waterboxes

Marine waterboxes allow service access for cleaning of the heat exchanger tubes without the need to break the water piping. Bolted on covers are arranged for convenient access. ANSI/AWWA C-606 couplings nozzle connections are standard; flanges are optional. Marine waterboxes are available for condenser and/or evaporator.

## Refrigerant storage/recycling system

A refrigerant storage/recycling system is a self contained package consisting of a refrigerant compressor with oil separator, storage receiver, water cooled condenser, filter drier, and the necessary valves and hoses to remove, replace, and distill refrigerant. All necessary controls and safety devices are a permanent part of the system.

## Special motors enclosures

There are job applications, primarily in manufacturing plants, and process applications, where more motor protection is required. Listed below are several alternatives.

ⓘ **Note:** Chiller certification to UL by a third party could be affected. Contact a Johnson Controls sales office for a specific selection.

### Weather-protected type I motors (WP-I)

A Weather-Protected Type I motor is an open machine with its ventilating passages constructed to prevent the passage of a cylindrical rod 3/4 in. in diameter. This affords protection against intrusion of rodents and some types of debris. These are regularly used in the pulp industry and where grime is present.

### Weather-protected type II motors (WP-II)

A Weather-Protected Type II motor has, in addition to the enclosure defined for Weather-Protected Type I motor, ventilating passages at both intake and exhaust sections. These passages are arranged so that high-velocity air and airborne particles, blown into the motor, can be discharged without entering the internal ventilating passages that lead directly to the electric parts of the motor itself. Space heaters are required with WP-II.

### Totally enclosed fan-cooled motors (TEFC)

TEFC motors are used where the location is extremely dirty, dusty, or wet, both indoors and outdoors. A totally enclosed fan-cooled unit is enclosed to prevent the free exchange of air between the inside and outside of the case but not sufficiently enclosed as to be termed air-tight. It is air-cooled by means of a fully guarded fan blowing cooling air over the outside of the motor. The fan is externally mounted on the motor shaft.

### Totally enclosed air-to-air cooled (TEAAC)

TEAAC motors are used when the environment is dirty or corrosive. A TEAAC motor is a totally enclosed motor, cooled by circulating the internal air through an air-to-air heat exchanger.

### Totally enclosed water-to-air cooled (TEWAC)

TEWAC motors are used when the environment is dirty or corrosive, in hazardous areas, or where minimum noise levels are required. A TEWAC motor is a totally enclosed machine which is cooled by circulating internal air which, in turn, is cooled by circulating water. It is provided with an internal water-cooled heat exchanger for cooling the internal air. Fans, integral with the rotor shaft, circulate the internal air.

## Spring isolation mounting

Spring isolation mounting is available instead of standard isolation mounting pads when required. Four level adjusting, spring type vibration isolator assemblies with non skid pads are provided for field installation. Isolators are designed for 1 in. (25 mm) deflection.

## Tube or tube sheet materials or waterbox coating

Copper-nickel or titanium tubes can be provided in lieu of standard copper for condenser and/or evaporator for protection against aggressive water conditions. Tube sheets may be of the clad type. Epoxy or ceramic coating can be applied to waterboxes or to tubesheet and waterboxes.

## Water flanges

Four 150 psig (1.14 MPa) ANSI raised-face flanges for condenser and evaporator water connections are factory-welded to water nozzles. Companion flanges, bolts, nuts, and gaskets are not included.

# Application data

The following discussion is a user's guide in the application and installation of YK-EP chillers to ensure the reliable, trouble free life for which this equipment was designed. While this guide is directed towards normal, water chilling applications, the Johnson Controls sales representative can provide complete recommendations on other types of applications.

## Brine applications

Various types of brine can be used in both the evaporator and condenser in lieu of water. The OptiView panel is programmed in the factory to allow extending the evaporator leaving brine temperature setpoint below 36°F (2.2°C). The low evaporator pressure cutout is factory programmed to the appropriate value depending on the percentage concentration and type of brine solution.

When the chiller is not running, brine should not be flowing through the evaporator. However, if there is brine flowing through the evaporator, there must be flow through the condenser to prevent tubes from freezing. In brine applications, the condenser pump control closes when the condenser saturation temperature reaches 35°F (1.7°C) and the pump shuts off when the temperature increases to 40°F (4.4°C). This is applicable if tied to the condenser pump control.

## Location

YORK YK-EP chillers are virtually vibration free and may generally be located at any level in a building where the construction will support the total system operating weight.

The unit site must be a floor, mounting pad, or foundation that is level within 1/4 in. (6.4 mm) and can support the operating weight of the unit.

Sufficient clearance to permit normal service and maintenance work must be provided all around and above the unit. Additional space should be provided at one end of the unit to permit cleaning of evaporator and condenser tubes as required. A doorway or other properly located opening may be used.

Install the chiller in an indoor location where temperatures range from 40°F to 104°F (4.4°C to 40°C). The dew point temperature in the equipment room must be below the entering condenser water temperature to prevent condensing water vapor inside of the unit mounted low and medium voltage solid state starter (L/MVSSS) cabinet (if applicable). Applications using cooling sources other than evaporative or closed loop air exchange methods need to request a factory-supplied temperature control valve to prevent condensation inside the unit mounted L/MVSSS cabinet (if applicable). Other areas susceptible to water vapor condensate are outside of the condenser shell and condenser waterboxes. Example applications include when the condenser water comes from chilled water, wells, river, or other low temperature fluids.

## Multiple units

**Selection:** Many applications require multiple units to meet the total capacity requirements as well as to provide flexibility and some degree of protection against equipment shutdown. There are several common unit arrangements for this type of application. The YK-EP chiller has been designed to be readily adapted to the requirements of these various arrangements.

**Parallel Arrangement:** Chillers may be applied in multiples with chilled and condenser water circuits connected in parallel between the units. Figure 29 represents a parallel arrangement with two chillers. Parallel chiller arrangements may consist of equally or unequally sized units. When multiple units are in operation, they will load and unload at equal percentages of design full load for the chiller.

**Figure 29: Parallel evaporators - Parallel condensers**

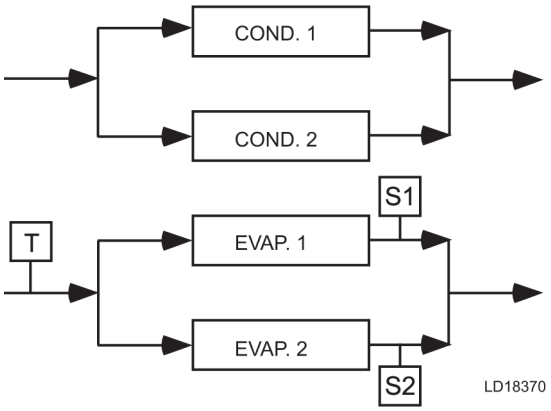


**S:** Temperature sensor for chiller capacity control

**T:** Thermostat for chiller capacity control

Depending on the number of units and operating characteristics of the units, loading and unloading schemes should be designed to optimize the overall efficiency of the chiller plant. Use an evaporator bypass piping arrangement to bypass fluid around evaporator of any unit which has cycled off at reduced load conditions. Alternate the chiller cycling order to equalize chiller starts and run hours.

**Series Arrangement:** Chillers may be applied in pairs with chilled water circuits connected in series and condenser water circuits connected in parallel. All of the chilled water flows through both evaporators with each unit handling approximately one half of the total load. When the load decreases to a customer selected load value, one of the units will be shut down by a sequence control. Because all water is flowing through the operating unit, that unit will cool the water to the required temperature. See Figure 30.

**Figure 30: Series evaporators - Parallel condensers**

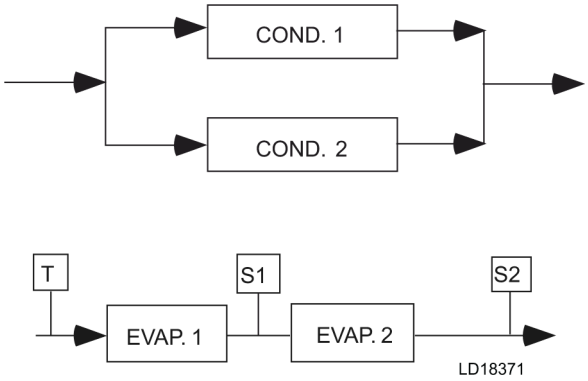


**Series Counter Flow Arrangement:** Chillers may be applied in pairs with chilled water circuits connected in series and with the condenser water in series counter flow. All of the chilled water flows through both evaporators. All of the condenser water flows through both condensers. The water ranges are split, which allows a lower temperature difference or head on each chiller, than multiple units in parallel. For equal chillers, the machine at higher temperature level typically provides slightly more than half the capacity. The compressor motors and gear codes on the two chillers are often matched, such that the high temperature machine can operate at the low temperature conditions when one unit is cycled off at part loads, as compared to series-parallel chillers which are typically not identical. See Figure 31.

**Figure 31: Series evaporators series - Counter flow condensers**

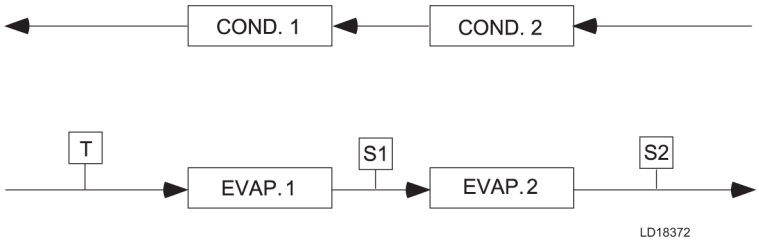


**S:** Temperature sensor for chiller capacity control

**T:** Thermostat for chiller capacity control

Series counter flow application can provide a significant building energy savings for large capacity plants which have chilled and condenser water temperature ranges greater than typical AHRI design conditions.

## Refrigerant relief piping

Each chiller is equipped with dual pressure relief valves on the condenser and two dual relief valves on the evaporator, or two single relief valves on the evaporator if the optional refrigerant isolation valves are ordered. The dual relief valves on the condenser are redundant and allow changing of either valve while the unit is fully charged. The purpose of the relief valves is to quickly relieve excess pressure of the refrigerant charge to the atmosphere, as a safety precaution in the event of an emergency such as fire. They are set to relieve at an internal pressure as noted on the pressure vessel data plate, and are provided in accordance with ASHRAE 15 safety code and ASME or applicable pressure vessel code.

Sized to the requirements of applicable codes, a vent line must run from the relief device to the outside of the building. This refrigerant relief piping must include a cleanable, vertical leg dirt trap to catch vent stack condensation. Vent piping must be arranged to avoid imposing a strain on the relief connection and should include one flexible connection.

## Sound and vibration considerations

A YK-EP chiller is not a source of objectionable sound and vibration in normal air conditioning applications. Neoprene isolation mounts are furnished as standard with each unit. Optional level adjusting spring isolator assemblies designed for 1 in. (25 mm) static deflection are available from Johnson Controls.

YK-EP chiller sound pressure level ratings will be furnished on request.

Control of sound and vibration transmission must be taken into account in the equipment room construction as well as in the selection and installation of the equipment.

## Thermal insulation

No appreciable operating economy can be achieved by thermally insulating the chiller. However, the chiller's cold surfaces should be insulated with vapor barrier insulation sufficient to prevent condensation. A chiller can be factory-insulated with 3/4 in. (19 mm) or 1 1/2 in. (38 mm) thick insulation, as an option. This insulation normally prevents condensation in environments with dry bulb temperatures of 50°F to 90°F (10°C to 32°C) and relative humidities of up to 75% [3/4 in. (19 mm) thickness] or 90% [1 1/2 in. (38 mm) thickness]. The insulation is painted and the surface is flexible and reasonably resistant to wear. It is intended for a chiller installed indoors and no protective covering of the insulation is usually required. If insulation is applied to the waterboxes at the job site, it must be removable to permit access to the tubes for routine maintenance.

## Ventilation

The ASHRAE Standard 15 Safety Code for Mechanical Refrigeration requires that all machinery rooms be vented to the outdoors utilizing mechanical ventilation by one or more power driven fans. This standard, plus National Fire Protection Association Standard 90A, state, local and any other related codes should be reviewed for specific requirements. Since the YK-EP chiller motors are air cooled, ventilation should allow for the removal of heat from the motor.

In addition, the ASHRAE Standard 15 requires a refrigerant vapor detector to be employed for all refrigerants. It must be located in an area where refrigerant from a leak would be likely to concentrate. An alarm is to be activated and the mechanical ventilation started at a value no greater than the TLV (Threshold Limit Value) of the refrigerant.

## Water circuits

**Flow rate:** For normal water chilling duty, evaporator and condenser flow rates are permitted at water velocity levels in the heat exchangers tubes of between 3 ft/sec and 12 ft/sec (0.91 m/s and 3.66 m/s) for constant flow applications. Variable flow applications are possible, and initial chiller selections should be made accordingly to allow proper range of flow while maintaining the minimum velocity indicated at the certified rating for the unit. Variable flow in the condenser is not recommended, as it generally raises the energy consumption of the system by keeping the condenser pressure high in the chiller. Additionally, the rate of fouling in the condenser will increase at lower water velocities associated with variable flow, raising system maintenance costs. Cooling towers typically have narrow ranges of operation with respect to flow rates, and will be more effective with full design flow. See Table 8 for flow limits.

**Temperature ranges:** For normal water chilling duty, leaving chilled water tempera-tures may be selected between 38°F (3.3°C) and 36°F (2.2°C) with Smart Freeze enabled] and 70°F (21.1°C) to obtain temperature deltas between entering chilled and leaving chilled water temperature of 3°F (1.7°C) up to 30°F (16.7°C).

**Water quality:** The practical and economical application of liquid chillers requires that the quality of the water supply for the condenser and evaporator be analyzed by a water treatment specialist. Water quality may affect the performance of any chiller through cor-rosion, deposition of heat-resistant scale, sedimentation or organic growth. These will degrade chiller performance and increase operating and maintenance costs. Normally, performance may be maintained by corrective water treatment and periodic cleaning of tubes. If water conditions exist which cannot be corrected by proper water treatment, it may be necessary to provide a larger allowance for fouling, and/or to specify special materials of construction. Refer to the *Application Guide 160.00-AD5* for more details.

**General piping:** All chilled water and condenser water piping should be designed and installed in accordance with accepted piping practice. Chilled water and condenser water pumps should be located to discharge through the chiller to assure positive pressure and flow through the unit. Piping should include offsets to provide flexibility and should be arranged to prevent drainage of water from the evaporator and condenser when the pumps are shut off. Piping should be adequately supported and braced independently of the chiller to avoid the imposition of strain on chiller components. Hangers must allow for alignment of the pipe. Isolators in the piping and in the hangers are highly desirable in achieving sound and vibration control.

**Convenience considerations:** To facilitate the performance of routine maintenance work, some or all of the following steps may be taken by the purchaser. Evaporator and condenser waterboxes are equipped with plugged vent and drain connections, except for marine waterboxes with vertical nozzles where there are drain connections only. If required, vent and drain valves can be installed with or without piping to an open drain. Pressure gauges with stopcocks and stop valves may be installed in the inlets and outlets of the condenser and chilled water line as close as possible to the chiller. An overhead monorail or beam may be used to facilitate servicing.

**Connections:** The standard chiller is designed for 150 psig (1.14 MPa) design working pressure in both the chilled water and condenser water circuits. The connections (water nozzles) to these circuits are furnished with grooves to ANSI/AWWA C-606 Standard for grooved and shouldered joints. Piping should be arranged for ease of disassembly at the unit for tube cleaning. All water piping should be thoroughly cleaned of all dirt and debris before final connections are made to the chiller.

**Fluid strainer:** A fluid strainer with perforated holes no larger than 1/8 in. (3.2 mm) must be field installed in the chilled fluid inlet line as close as possible to the chiller. If located close enough to the chiller, the chilled fluid pump may be protected by the same strainer. The strainer is to protect the chiller from debris or objects which could block flow through individual heat exchanger tubes. A reduction in flow through tubes could seriously impair the chiller performance or even result in tube freeze up. A thermal-type flow switch is factory-installed in the evaporator nozzle and connected to the OptiView panel, which assures adequate chilled fluid flow during operation.

**Low entering condenser temperature:** The chiller is engineered for maximum efficiency at both design and part-load operation by taking advantage of the colder cooling tower fluid temperatures which naturally occur during the winter months and off-design conditions. Appreciable power savings are realized from these reduced heads.

The unique design of YORK YK-EP centrifugal chillers in the HVAC industry allows cold condenser fluid starts, without the trips experienced by most other manufacturers, as detailed below:

- The condenser shell is higher than the evaporator, so when the chiller is not in operation, gravity moves refrigerant from the condenser into the evaporator. On start-up, the compressor begins pumping refrigerant gas from the evaporator into the condenser and thus builds head pressure.
- The butterfly-type liquid expansion valve (variable orifice valve) is controlled by the condenser liquid level at the sub-cooler inlet. As that level increases, the valve is driven open to allow maximum refrigerant flow. An additional expansion valve (variable orifice valve) is controlled by the liquid level in the economizer.
- YORK YK-EP centrifugal chillers start-up with vanes closed, which reduces the amount of refrigerant gas pumped out of the evaporator over time.
- The control system is set to stop the vanes from further opening if the evaporator fluid temperature achieves 1°F (0.6°C) above the trip set-point for low water temperature cut-out, typically 4°F (2.2°C) below setpoint.

At initial start-up, entering condenser water temperature may be 25°F (13.9°C) colder than standby chilled water temperature, but the minimum temperature should be above the freezing point of the chilled liquid.

Handling cold condenser fluid at the onset of changeover from free cooling with tower/heat exchangers is often a realistic requirement. The chiller will start and continue to operate because the pressure differential increases quickly, thus preventing nuisance trips on low evaporator pressure usually caused by: system depression, refrigerant stack-up in the condenser, and starvation of the evaporator.

For continuous operation, the minimum entering condenser fluid temperature for both full and part load conditions is provided by the following equation:

**Figure 32: Metric equation**

$$\text{Min. ECWT} = \text{LCHWT} - \text{C RANGE} + 5^{\circ}\text{F} + 12 \left(\frac{\%\text{Load}}{100}\right)$$

**Figure 33: SI equation**

$$\text{Min. ECWT} = \text{LCHWT} - \text{C RANGE} + 2.8^{\circ}\text{C} + 6.6 \left(\frac{\%\text{Load}}{100}\right)$$

Where:

- ECWT = entering condensing water temperature
- LCHWT = leaving chilled water temperature
- C RANGE = condensing water temperature range at the given load condition

**Examples:**

- 2,000 TR (7032 kW) chiller
- 44°F (6.7°C) leaving chilled fluid temperature
- 85/94.3°F (29.4/34.6°C) condenser fluid temperature range at full load

**Metric example**

**Figure 34: Equation at full load:**

$$\text{Min. ECFT} = 44 - (94.3 - 85) + 5 + 12 \left(\frac{100}{100}\right) = 44 - 9.3 + 5 + 12 =$$

$$\text{Min. ECFT} = 51.7\ °F$$

**Figure 35: Equation at 20% load:**

$$\text{Min. ECFT} = 44 - (87 - 85) + 5 + 12 \left(\frac{20}{100}\right) = 44 - 2 + 5 + 2.4 =$$

$$\text{Min. ECFT} = 49.4\ °F$$

**SI example**

**Figure 36: Equation at full load**

$$\text{Min. ECFT} = 6.7 - (34.6 - 29.4) + 2.8 + 6.6 \left(\frac{100}{100}\right)$$

$$= 6.7 - 5.2 + 2.8 + 6.6 =$$

$$\text{Min. ECFT} = 10.9°C$$

**Figure 37: Equation at 20% load**

$$\text{Min. ECFT} = 6.7 - (30.6 - 29.4) + 2.8 + 6.6 \left(\frac{20}{100}\right)$$

$$= 6.7 - 1.2 + 2.8 + 1.3 =$$

$$\text{Min. ECFT} = 9.6\ °C$$

## Table 8: Water flow rate limits gpm (L/s) based on constant flow application and standard tubes

| Comp | Length (ft) | Flow/PD | Evaporator | | | | | | | Condenser | | | | | | |
|---|---|---|---|---|---|---|---|---|---|---|---|---|---|---|---|---|
| | | | Shell code | 1 pass | | 2 pass | | 3 pass | | Shell code | 1 pass | | 2 pass | | 3 pass | |
| | | | | Min | Max | Min | Max | Min | Max | | Min | Max | Min | Max | Min | Max |
| K7 and KS* | 22 | GPM | BB | 3,170 | 12,680 | 1,580 | 3,850 | 1,050 | 2,550 | BB, BF | 5,360 | 19,260 | 2,690 | 6,840 | 1,789 | 4,610 |
| | | (L/S) | | 200 | 800 | 100 | 243 | 66 | 161 | | 338 | 1215 | 170 | 432 | 113 | 291 |
| | | FT | | 4.9 | 59.2 | 9.0 | 45.0 | 13.3 | 67.5 | | 4.7 | 46.1 | 9.4 | 45.0 | 20.9 | 67.5 |
| | | (KPA) | | 15 | 177 | 27 | 134 | 40 | 202 | | 14 | 138 | 28 | 134 | 62 | 202 |
| | | GPM | BC | 3,910 | 15,650 | 1,950 | 4,710 | 1,300 | 3,130 | BC, BG | 5,880 | 21,230 | 2,940 | 7,450 | 1,964 | 5,050 |
| | | (L/S) | | 247 | 987 | 123 | 297 | 82 | 197 | | 371 | 1339 | 185 | 470 | 124 | 319 |
| | | FT | | 5.1 | 62.7 | 9.2 | 45.0 | 13.7 | 67.5 | | 4.8 | 47.9 | 8.6 | 45.0 | 19.4 | 67.5 |
| | | (KPA) | | 15 | 187 | 27 | 134 | 41 | 202 | | 14 | 143 | 26 | 134 | 58 | 202 |
| | | GPM | BD | 4,720 | 18,820 | 2,360 | 5,630 | 1,570 | 3,730 | BD, BH | 6,400 | 23,080 | 3,200 | 8,050 | | |
| | | (L/S) | | 298 | 1,187 | 149 | 355 | 99 | 235 | | 404 | 1456 | 202 | 508 | | |
| | | FT | | 5.4 | 66.5 | 9.4 | 45.0 | 14.0 | 67.5 | | 5.0 | 49.4 | 8.7 | 45.0 | | |
| | | (KPA) | | 16 | 199 | 28 | 134 | 42 | 202 | | 15 | 148 | 26 | 134 | | |
| | | GPM | B5 | 3,240 | 12,980 | 1,610 | 5,120 | 1,080 | 3,360 | B1, B5 | 4,250 | 15,320 | 2,130 | 7,120 | 1,417 | 4,890 |
| | | (L/S) | | 204 | 819 | 102 | 323 | 68 | 212 | | 268 | 967 | 134 | 449 | 89 | 309 |
| | | FT | | 3.1 | 39.2 | 5.4 | 45.0 | 8.2 | 67.5 | | 3.1 | 31.0 | 8.1 | 45.0 | 18.0 | 67.5 |
| | | (KPA) | | 9 | 117 | 16 | 134 | 24 | 202 | | 9 | 93 | 24 | 134 | 54 | 202 |
| | | GPM | B6 | 3,880 | 15,540 | 1,830 | 6,070 | 1,290 | 4,010 | B2, B6 | 5,260 | 18,850 | 2,630 | 8,600 | 1,753 | 5,950 |
| | | (L/S) | | 245 | 980 | 115 | 383 | 81 | 253 | | 332 | 1,189 | 166 | 543 | 111 | 375 |
| | | FT | | 3.3 | 42.2 | 5.6 | 45.0 | 8.4 | 67.5 | | 3.3 | 32.8 | 5.8 | 45.0 | 17.2 | 67.5 |
| | | (KPA) | | 10 | 126 | 17 | 134 | 25 | 202 | | 10 | 98 | 17 | 134 | 51 | 202 |
| | | GPM | B7 | 4,380 | 17,570 | 2,190 | 6,800 | 1,460 | 4,500 | B3, B7 | 6,140 | 22,107 | 3,070 | 9,800 | 2,047 | 6,820 |
| | | (L/S) | | 276 | 1,108 | 138 | 429 | 92 | 284 | | 387 | 1,395 | 194 | 618 | 129 | 430 |
| | | FT | | 3.4 | 44.9 | 5.7 | 45.0 | 8.5 | 67.5 | | 3.5 | 35.4 | 5.5 | 45.0 | 15.5 | 67.5 |
| | | (KPA) | | 10 | 134 | 17 | 134 | 25 | 202 | | 10 | 106 | 16 | 134 | 46 | 202 |
| | | GPM | B8 | 4,900 | 19,610 | 2,450 | 6,580 | 1,810 | 4,330 | B4, B8 | 6,780 | 24,440 | 3,390 | 10,290 | | |
| | | (L/S) | | 309 | 1,237 | 155 | 415 | 114 | 273 | | 428 | 1542 | 214 | 649 | | |
| | | FT | | 3.8 | 60.7 | 6.3 | 44.9 | 11.8 | 67.2 | | 3.6 | 37.5 | 5.7 | 42.2 | | |
| | | (KPA) | | 11 | 181 | 19 | 134 | 35 | 201 | | 11 | 112 | 17 | 126 | | |
| | | GPM | CJ | 4,870 | 19,380 | 2,450 | 5,790 | 1,630 | 3,770 | CJ, CT | 6,230 | 22,440 | 3,110 | 7,990 | 2,080 | 5,320 |
| | | (L/S) | | 307 | 1,223 | 155 | 365 | 103 | 238 | | 393 | 1,416 | 196 | 504 | 131 | 336 |
| | | FT | | 5.5 | 67.4 | 9.5 | 45.0 | 14.2 | 67.0 | | 4.9 | 48.8 | 8.5 | 45.0 | 18.5 | 67.5 |
| | | (KPA) | | 16 | 201 | 28 | 134 | 42 | 200 | | 15 | 146 | 25 | 134 | 55 | 202 |
| | | GPM | CK | 5,380 | 21,400 | 2,690 | 6,360 | 1,800 | 4,170 | CK, CU | 6,950 | 25,010 | 3,480 | 8,550 | 2,320 | 5,900 |
| | | (L/S) | | 339 | 1,350 | 170 | 401 | 114 | 263 | | 438 | 1,578 | 220 | 539 | 146 | 372 |
| | | FT | | 5.7 | 70.6 | 9.5 | 45.0 | 14.4 | 66.4 | | 5.1 | 51.1 | 8.6 | 45.0 | 16.8 | 67.5 |
| | | (KPA) | | 17 | 211 | 28 | 134 | 43 | 198 | | 15 | 153 | 26 | 134 | 50 | 202 |
| | | GPM | CL | 5,560 | 23,350 | 2,930 | 6,870 | 1,960 | 4,490 | CL, CV | 7,890 | 28,240 | 3,940 | 9,900 | | |
| | | (L/S) | | 351 | 1,473 | 185 | 433 | 124 | 283 | | 498 | 1,782 | 249 | 625 | | |
| | | FT | | 5.9 | 74.3 | 9.7 | 45.0 | 14.6 | 65.8 | | 5.4 | 54.1 | 8.8 | 45.0 | | |
| | | (KPA) | | 18 | 222 | 29 | 134 | 44 | 197 | | 16 | 162 | 26 | 134 | | |
| | | GPM | C6 | 4,040 | 16,190 | 2,030 | 6,300 | 1,350 | 4,150 | C1, C6 | 4,140 | 14,910 | 2,070 | 7,050 | 1,380 | 4,770 |
| | | (L/S) | | 255 | 1,021 | 128 | 397 | 85 | 262 | | 261 | 941 | 131 | 445 | 87 | 301 |
| | | FT | | 3.6 | 43.0 | 5.6 | 45.0 | 8.4 | 67.0 | | 3.1 | 30.8 | 8.2 | 45.0 | 17.5 | 67.5 |
| | | (KPA) | | 11 | 128 | 17 | 134 | 25 | 200 | | 9 | 92 | 24 | 134 | 52 | 202 |
| | | GPM | C7 | 4,870 | 19,400 | 2,470 | 7,470 | 1,630 | 4,900 | C2, C7 | 4,970 | 17,910 | 2,850 | 8,350 | 1,650 | 5,640 |
| | | (L/S) | | 307 | 1,224 | 156 | 471 | 103 | 309 | | 314 | 1,130 | 180 | 527 | 104 | 356 |
| | | FT | | 3.6 | 47.3 | 5.9 | 45.0 | 8.7 | 66.2 | | 3.2 | 32.5 | 6.6 | 45.0 | 15.7 | 67.5 |
| | | (KPA) | | 11 | 141 | 18 | 134 | 26 | 198 | | 10 | 97 | 20 | 134 | 47 | 202 |
| | | GPM | C8 | 5,760 | 22,830 | 2,880 | 8,660 | 1,920 | 5,710 | C3, C8 | 6,480 | 23,140 | 3,250 | 10,620 | 2,160 | 7,180 |
| | | (L/S) | | 363 | 1,440 | 182 | 546 | 121 | 360 | | 409 | 1,460 | 205 | 670 | 136 | 453 |
| | | FT | | 4.0 | 52.7 | 6.0 | 45.0 | 8.9 | 66.4 | | 3.5 | 35.9 | 5.4 | 45.0 | 10.2 | 67.5 |
| | | (KPA) | | 12 | 157 | 18 | 134 | 27 | 198 | | 10 | 107 | 16 | 134 | 30 | 202 |
| | | GPM | C9 | 6,420 | 25,560 | 3,210 | 9,550 | 3,140 | 6,290 | C4, C9 | 8,090 | 29,122 | 4,050 | 12,800 | | |
| | | (L/S) | | 405 | 1,613 | 203 | 603 | 198 | 397 | | 510 | 1,837 | 256 | 808 | | |
| | | FT | | 4.3 | 58.2 | 6.1 | 45.0 | 9.2 | 66.6 | | 5.0 | 42.0 | 5.7 | 45.0 | | |
| | | (KPA) | | 13 | 174 | 18 | 134 | 27 | 199 | | 15 | 125 | 17 | 134 | | |

ⓘ **Note:** *The KS compressor requires a special quote.

# Electrical considerations

## Starters

The primary motor of the YORK YK-EP can be supplied with a remote mounted medium or high voltage variable speed drive (M/HVVSD), unit mounted medium voltage solid state starter (MVSSS), remote mounted medium or high voltage solid state starter (M/HVSSS), and remote mounted medium or high voltage electromechanical starter (M/HVEMS). A remote mounted M/HVEMS can be furnished in accordance with YORK Standard Specifications (R-1206). This ensures that starter components, controls, circuits, and terminal markings are suitable for the required overall system performance. The economizer motor is always equipped with a unit mounted low voltage solid state starter (LVSSS).

**Motor Voltage** - The low voltage economizer motor (380 V to 480 V) is furnished with six leads (or multiples of six leads). Medium and high voltage (2300 V and above) primary motors have three leads. Motor circuit conductor size must be in accordance with the National Electrical Code (NEC), or other applicable codes, for the motor full load amperes (FLA). Flexible conduit should be used for the last several feet to the chiller in order to provide vibration isolation. Table 9 lists the allowable variation in voltage supplied to the chiller motor. The unit name plate is stamped with the specific motor voltage, and frequency for the appropriate motor.

**Table 9: Motor voltage variations**

| Frequency | Rated voltage | Nameplate voltage | Operating voltage | |
|---|---|---|---|---|
| | | | Minimum | Maximum |
| 60 Hz | 380 | 380 | 342 | 415 |
| | 460 | 440/460/480 | 414 | 508 |
| | 2300 | 2300 | 2070 | 2530 |
| | 3300 | 3300 | 2970 | 3630 |
| | 4000 | 4000/4160 | 3600 | 4576 |
| 50 Hz | 380 | 380/400 | 342 | 423 |
| | 415 | 415 | 374 | 440 |
| | 2,300 | 2,300 | 2,070 | 2,530 |
| | 3,300 | 3,300 | 2,970 | 3,630 |

ⓘ **Note:** For motor voltages above 4,160 V/60 Hz and 3,300 V/50 Hz, contact your local Johnson Controls sales office for a specific selection.

**Copper Conductors:** Only connect copper conductors to compressor motors and starters. Aluminum conductors have proven to be unsatisfactory when connected to copper lugs. Aluminum oxide and the difference in thermal conductivity between copper and aluminum cannot guarantee the required tight connection over a long period of time.

**Power Factor Correction Capacitors:** Capacitors can be applied to a chiller for the purpose of power factor correction. For remote-mounted electromechanical starters, the capacitors should be located on the load side of the starter. The capacitors must be sized and installed to meet the National Electrical Code and be verified by Johnson Controls.

**Power Supply for Controls, Starters, and Motors:** YK-EP requires one medium or high voltage power source for the primary driveline, one low voltage power sources for the economizer driveline, and low voltage inputs to auxiliaries (oil system and control panels). The connections necessary for the customer to install depend on the type of starter used, as described in the following list:

1. Remote Mounted MVVSD Primary Starter (North America and Asia):
   a. From Line Voltage to Primary MVVSD:
      Medium Voltage power for 2300 V to 4160 V (60 Hz) or 3300 V (50 Hz) is supplied and installed by the customer.

b. From Line Voltage to Economizer LVSSS:

   Low Voltage power for 380 V to 480 V (60 Hz) or 380 V to 415 V (50 Hz) is supplied and installed by the customer.

c. From Line Voltage to Primary and Economizer Motor Space Heater:

   If the factory option is not ordered, the power and wiring connection for the space heaters for 115 V (50 Hz / 60 Hz) is supplied and installed by the customer.

a. From MVVSD to Primary Driveline:

   Medium Voltage power for 4160 V (60 Hz) or 3300 V (50 Hz) is supplied and installed by the customer.

b. From MVVSD to OptiView Control Center:

   Low Voltage power for 115 V (50 Hz / 60 Hz) is supplied and installed by the customer in quantity (2).

c. From MVVSD to Variable Speed Oil Pump Control Panel (VSOP):

   Low Voltage power for 400 V to 460 V (60 Hz) or 400 V (50 Hz) is supplied and installed by the customer.

2. Remote Mounted HVVSD Primary Starter (North America and Asia):

   a. From Line Voltage to Primary HVVSD:

      High Voltage power for 6,000 V to 13,800 V (60 Hz) or 6,000 V to 11,000 V (50 Hz) is supplied and installed by the customer.

   b. From Line Voltage to Economizer LVSSS:

      Low Voltage power for 380 V to 480 V (60 Hz) or 380 V to 415 V (50 Hz) is supplied and installed by the customer.

   c. From Line Voltage to Primary and Economizer Motor Space Heater:

      If the factory option is not ordered, the power and wiring connection for the space heaters for 115 V (50 Hz / 60 Hz) is supplied and installed by the customer.

   a. From HVVSD to Primary Driveline:

      Medium Voltage power for 4,160 V (60 Hz) is supplied and installed by the customer.

   b. From HVVSD to OptiView Control Center:

      Low Voltage power for 115 V (50 Hz / 60 Hz) is supplied and installed by the customer in quantity (2).

   c. From HVVSD to Variable Speed Oil Pump Control Panel (VSOP):

      Low Voltage power for 400 V to 460 V (60 Hz) is supplied and installed by the customer.

3. Remote Mounted HVVSD Primary Starter (Middle East):

   a. From Line Voltage to Primary HVVSD:

      High Voltage power for 11,000 V (50 Hz) is supplied and installed by the customer.

   b. From Line Voltage to Economizer LVSSS:

      Low Voltage power for 380 V to 415 V (50 Hz) is supplied and installed by the customer.

   c. From Line Voltage to HVVSD and Variable Speed Oil Pump Control Panel (VSOP):

      Low Voltage power for 400 V (50 Hz) is supplied and installed by the customer.

   d. From Line Voltage to Primary and Economizer Motor Space Heater:

      If the factory option is not ordered, the power and wiring connection for the space heaters for 115 V (50 Hz) is supplied and installed by the customer.

   e. From Line Voltage to OptiView Control Center:

Low Voltage power for 115 V (50 Hz) is supplied and installed by the customer in quantity (2).

a. From HVVSD to Primary Driveline:

   Medium Voltage power for 4,000 (50 Hz) is supplied and installed by the customer.

4. Unit Mounted MVSSS Primary Starter (North America and Asia):
   a. From Line Voltage to Primary MVSSS:

      Medium Voltage power for 2300 V to 4160 V (60 Hz) or 2300 V to 3300 V (50 Hz) is supplied and installed by the customer.
   b. From Line Voltage to Economizer LVSSS:

      Low Voltage power for 380 V to 480 V (60 Hz) or 380 V to 415 V (50 Hz) is supplied and installed by the customer.
   c. From Line Voltage to Primary and Economizer Motor Space Heater:

      If the factory option is not ordered, the power and wiring connection for the space heaters for 115 V (50 Hz / 60 Hz) is supplied and installed by the customer.
5. Remote Mounted M/HVSSS Primary Starter (North America and Asia):
   a. From Line Voltage to Primary M/HVSSS:

      Medium and High Voltage power for 2300 V to 13800 V (60 Hz) or 3,300 V to 11,000 V (50 Hz) is supplied and installed by the customer.
   b. From Line Voltage to Economizer LVSSS:

      Low Voltage power for 380 V to 480 V (60 Hz) or 380 V to 415 V (50 Hz) is supplied and installed by the customer.
   c. From Line Voltage to Primary and Economizer Motor Space Heater:

      If the factory option is not ordered, the power and wiring connection for the space heaters for 115 V (50 Hz / 60 Hz) is supplied and installed by the customer.
   a. From M/HVSSS to Primary Driveline:

      Medium and High Voltage power for 2,300 V to 13,800 V (60 Hz) or 3,300 V to 11,000 V (50 Hz) is supplied and installed by the customer.
   b. From M/HVSSS to OptiView Control Center:

      Low Voltage power for 115 V (50 Hz / 60 Hz) is supplied and installed by the customer in quantity (2).
   c. From M/HVSSS to Variable Speed Oil Pump Control Panel (VSOP):

      Low Voltage power for 400 V to 460 V (60 Hz) or 400 V (50 Hz) is supplied and installed by the customer.
6. Remote Mounted HVSSS Primary Starter (Middle East):
   a. From Line Voltage to HVSSS

      High Voltage power for 13,800 (60 Hz) or 11,000 (50 Hz) is supplied and installed by the customer.
   b. From Line Voltage to Economizer LVSSS:

      Low Voltage power for 400 V (60 Hz) or 380 V to 415 V (50 Hz) is supplied and installed by the customer.
   c. From Line Voltage to Primary and Economizer Motor Space Heater:

      If the factory option is not ordered from the OptiView, the power and wiring connection for the space heaters for 115 V (60 / 50 Hz) is supplied and installed by the customer.
   a. From HVSSS to Primary Driveline:

      Medium Voltage power for 13,800 V (60 Hz) or 11,000 (50 Hz) is supplied and installed by the customer.

b. From HVSSS to OptiView Control Center:

   Low Voltage power for 115 V (60 / 50 Hz) is supplied and installed by the customer in quantity (2).

c. From HVSSS to Variable Speed Oil Pump Control Panel (VSOP):

   Low Voltage power for 400 V (60 / 50 Hz) is supplied and installed by the customer.

7. Remote Mounted M/HVEMS Primary Starter (North America and Asia):

   a. From Line Voltage to Primary M/HVEMS:

      Medium and High Voltage power for 2,300 V to 13,800 V (60 Hz) or 3,300 V to 11,000 V (50 Hz) is supplied and installed by the customer.

   b. From Line Voltage to Economizer LVSSS:

      Low Voltage power for 380 V to 480 V (60 Hz) or 380 V to 415 V (50 Hz) is supplied and installed by the customer.

   c. From Line Voltage to Primary and Economizer Motor Space Heater:

      If the factory option is not ordered, the power and wiring connection for the space heaters for 115 V (50 Hz / 60 Hz) is supplied and installed by the customer.

   a. From M/HVEMS to Primary Driveline:

      Medium and High Voltage power for 2,300 V to 13,800 V (60 Hz) or 3,300 V to 11,000 V (50 Hz) is supplied and installed by the customer.

   b. From M/HVEMS to OptiView Control Center:

      Low Voltage power for 115 V (50 Hz / 60 Hz) is supplied and installed by the customer in quantity (2).

   c. From M/HVEMS to Variable Speed Oil Pump Control Panel (VSOP):

      Low Voltage power for 400 V to 460 V (60 Hz) or 400 V (50 Hz) is supplied and installed by the customer.

**Ampacity on Load Side of Starter:** Electrical power wire size to the chiller is based on the minimum unit ampacity. For remote starters, the National Electrical Code defines the calculation of ampacity, as summarized below. More specific information on actual amperage ratings are supplied with the submittal drawings.

- Three lead types of starting (Across the Line, Autotransformer, and Primary Reactor) Minimum circuit ampacity per conductor (1 of 3):

  `Ampacity = 1.25 x compressor motor amps`

**Ampacity on Line Side of Starter:** The only load applied to the starter is the compressor motor load. All other low voltage devices must be fed by an additional power supply feed.

**Minimum Circuit Ampacity:** 125% of compressor motor amps.

**Branch Circuit Overcurrent Protection:** The branch circuit overcurrent protection devices should be a time-delay type, with a minimum rating equal to the next standard fuse/breaker rating above the calculated value. It is calculated taking into account the compressor motor amps and may also include the control transformer and oil pump motor. Refer to the submittal drawings for the specific calculations for each application.

**Variable Speed Oil Pump (VSOP) Control Panel Power Supply Controls:** For a remote mounted medium or high voltage variable speed drive (M/HVVSD), remote mounted medium or high voltage solid state starter (M/HVSSS), and remote mounted medium or high voltage electromechanical starter (M/HVEMS), a 115 V, single phase, 60 Hz or 50 Hz, 2 kVA power supply must be furnished at the starter. These chillers with remote starters/drives require a three-phase supply for the auxiliary power (heater and oil pump). For chillers with a unit mounted medium voltage solid state starter, the VSOP control panel power does not require an additional control power transformer, but is

included in the Johnson Controls furnished primary starter. The economizer compressor motor auxiliary power is always sourced from the economizer starter, a unit mounted LVSSS.

## Motor electrical data

Select the smallest motor available which equals or exceeds the input power (kW) from the chiller rating program in Table 12. The full load amperes (FLA) listed in the tables are the maximum values and correspond to the maximum motor kW listed. When the input power (kW) is less than maximum motor kW, the FLA should be reduced per the following equation:

$$FLA = \frac{\text{Motor kW x Max. Motor FLA}}{\text{Max. Motor kW}}$$

The benefit from the FLA correction is the possible use of smaller power wiring and/or starter size.

The locked rotor amperes (LRA) are read directly from Table 4 and Table 6 for specific Motor Code and voltage. This is because the LRA is dependent only on motor size and voltage and is independent of input power (kW).

Inrush amperes (IRA) depend on LRA and the type of starter applied. The inrush can be calculated using a percentage of LRA shown in Table 16.

**Table 10: Available 60 Hz compressor/shell/motor combinations**

| Compressor code | Evaporator code | Condenser code | Motor codes, 60 Hz | | |
|---|---|---|---|---|---|
| | | | Low voltage (SSS) | Medium voltage (none/SSS/EM/PR/AT) | Medium voltage (VSD) |
| **K7-Q3**<br>**KS-Q3** | BB, BC, BD, B5, B6, B7,B8, CJ, CK, CL, C6, C7, C8, C9 | BB, BC, BD, BF, BG, BH, B1, B2, B3, B4, B5, B6, B7, B8, CJ, CK, CL, CT, CU, CV, C1, C2, C3, C4, C6, C7, C8, C9 | EF -EG -<br>EH -EJ -EK | -DD to -DL | -DD to -DL |
| **Voltage (V)** | | | 380 up to 460 | 2300 up to 13200 | 2300 up to 4160 |

**Table 11: Available 50 Hz compressor/shell/motor combinations**

| Compressor code | Evaporator code | Condenser code | Motor codes, 50 Hz | | |
|---|---|---|---|---|---|
| | | | Low voltage (SSS) | Medium voltage (none/SSS/EM/PR/AT) | Medium voltage (VSD) |
| **K7-Q3KS-Q3** | BB, BC, BD, B5, B6, B7,B8, CJ, CK, CL, C6, C7, C8, C9 | BB, BC, BD, BF, BG, BH, B1, B2, B3, B4, B5, B6, B7, B8, CJ, CK, CL, CT, CU, CV, C1, C2, C3, C4, C6, C7, C8, C9 | 5EC 5ED<br>5EE 5EF 5EG | 5DD to 5DL | 5DD to 5DL |
| **Voltage (V)** | | | 380 up to 415 | 2300 up to 11000 | 3300 |

ⓘ **Note:** For unit voltages above 4160 V/60 Hz and 3300 V/50 Hz, contact your local Johnson Controls Sales office for a specific selection.

### Table 12: 60 Hz electrical data for primary motor

| Motor code | | -DD | -DE | -DF | -DH | -DJ | -DK | -DL |
|---|---|---|---|---|---|---|---|---|
| Shaft HP (max) | | 1300 | 1400 | 1500 | 1750 | 2000 | 2250 | 2500 |
| Input kW (max) | | 1015 | 1093 | 1171 | 1359 | 1554 | 1748 | 1942 |
| F.L. eff. - % | | 95.5 | 95.5 | 95.5 | 96.0 | 96.0 | 96.0 | 96.0 |
| F.L. power factor | | 0.88 | 0.88 | 0.88 | 0.87 | 0.89 | 0.89 | 0.89 |
| Volts | Amperes (Max.) | | | | | | | |
| 2300 | FLA | 290 | 312 | 334 | 383 | 438 | 493 | 548 |
| | LRA | 1882 | 2031 | 2171 | 2390 | 2879 | 3199 | 3356 |
| 3300 | FLA | 202 | 217 | 233 | 267 | 306 | 344 | 382 |
| | LRA | 1311 | 1416 | 1514 | 1661 | 2011 | 2388 | 2479 |
| 4000 | FLA | 166 | 179 | 192 | 220 | 252 | 283 | 315 |
| | LRA | 1077 | 1177 | 1246 | 1428 | 1669 | 1842 | 2047 |
| 4160 | FLA | 160 | 172 | 185 | 212 | 242 | 273 | 303 |
| | LRA | 1120 | 1224 | 1296 | 1485 | 1736 | 1772 | 1968 |

**Note:**

- For motor voltages above 4160 V/60 Hz and 3300 V/50 Hz, contact your local Johnson Controls Sales office for a specific selection.
- High voltage and special motor designs may not meet efficiency, power factor or amperes values shown for standard motors.
- Minimum reduced voltage tap 80%.

### Table 13: 50 Hz electrical data for primary motor

| Motor code | | 5DD | 5DE | 5DF | 5DG | 5DH | 5DJ | 5DK | 5DL |
|---|---|---|---|---|---|---|---|---|---|
| Shaft HP (max) | | 1300 | 1400 | 1500 | 1650 | 1750 | 2000 | 2250 | 2500 |
| Input kW (max) | | 1015 | 1093 | 1171 | 1288 | 1359 | 1554 | 1748 | 1942 |
| F.L. eff. - % | | 95.5 | 95.5 | 95.5 | 95.5 | 96.0 | 96.0 | 96.0 | 96.0 |
| F.L. power factor | | 0.88 | 0.88 | 0.88 | 0.88 | 0.89 | 0.89 | 0.89 | 0.89 |
| Volts | Amperes (max) | | | | | | | | |
| 3300 | FLA | 202 | 217 | 233 | 256 | 267 | 306 | 344 | 382 |
| | LRA | 1135 | 1415 | 1415 | 1415 | 1667 | 1836 | 2233 | 2481 |

**Note:**

- For motor voltages above 4160 v/60 Hz and 3300 V/50 Hz, contact your local Johnson Controls sales office for a specific selection.
- High voltage and special motor designs may not meet efficiency, power factor or amperes values shown for standard motors.
- Minimum reduced voltage tap 80%.

### Table 14: 60 Hz electrical data for economizer motor

| Motor code | | -EF | -EG | -EH | -EJ | -EK |
|---|---|---|---|---|---|---|
| Shaft HP (max) | | 154 | 177 | 201 | 237 | 270 |
| Input kW (max) | | 122 | 139 | 158 | 185 | 211 |
| F.L. eff. - % | | 94.5 | 95 | 95 | 95.4 | 95.4 |
| F.L. power factor | | 0.88 | 0.88 | 0.88 | 0.88 | 0.88 |
| Volts | Amperes (max) | | | | | |
| 380 | FLA | 210 | 240 | 272 | 320 | 364 |
| | LRA | 1482 | 1646 | 1730 | 2153 | 2500 |
| 440 | FLA | 181 | 207 | 235 | 276 | 315 |
| | LRA | 1177 | 1301 | 1320 | 1655 | 1865 |
| 460 | FLA | 173 | 198 | 225 | 264 | 301 |
| | LRA | 1230 | 1360 | 1380 | 1730 | 1950 |
| 480 | FLA | 166 | 190 | 216 | 253 | 288 |
| | LRA | 1283 | 1419 | 1440 | 1805 | 2035 |

ⓘ **Note:** These motors are designed to meet or exceed NEMA Premium and European IE2 efficiency requirements.

### Table 15: 50 Hz electrical data for economizer motor

| Motor code | | 5EC | 5ED | 5EE | 5EF | 5EG |
|---|---|---|---|---|---|---|
| Shaft HP (max) | | 148 | 168 | 198 | 225 | 252 |
| Input kW (max) | | 117 | 133 | 156 | 177 | 198 |
| F.L. eff. - % | | 94.3 | 94.5 | 94.7 | 94.9 | 95.0 |
| F.L. power factor | | 0.88 | 0.88 | 0.88 | 0.88 | 0.88 |
| Volts | Amperes (max) | | | | | |
| 380 | FLA | 202 | 229 | 269 | 305 | 342 |
| | LRA | 1385 | 1385 | 1640 | 1890 | 2144 |
| 400 | FLA | 192 | 217 | 256 | 290 | 324 |
| | LRA | 1458 | 1458 | 1726 | 1989 | 2257 |
| 415 | FLA | 185 | 210 | 246 | 280 | 313 |
| | LRA | 1283 | 1385 | 1502 | 1700 | 2031 |

ⓘ **Note:** These motors are designed to meet or exceed NEMA Premium and European IE2 efficiency requirements.

### Table 16: Compressor motor starter options

| Starter options | Variable speed drive (VSD) | Solid state starter (SSS) | | Across-the-line (EMS) | Auto transformer (EMS) | | Primary reactor (EMS) | |
|---|---|---|---|---|---|---|---|---|
| **Driveline** | Primary | Economizer | Primary | Primary | Primary | | Primary | |
| **Voltage in 60 Hz** | 2300-13800 | 380-480 | 2300-4160 | 2300-13200 | 2300-13200 | | 2300-13200 | |
| **Voltage in 50 Hz** | 3000-11000 | 380-415 | 3300 | 2300-11000 | 2300-11000 | | 2300-11000 | |
| **Transition** | — | — | | — | Closed | | Closed | |
| **% TAP** | — | — | | — | 65 | 80 | 65 | 80 |
| **Inrush as% of LRA** | — | 45 | | 100 | 42.3 | 64 | 65 | 80 |

**Note:**

- For motor starters above 4160 V/60 Hz and 3300 V/50 Hz contact the Johnson Controls Sales Office for a specific selection.
- Minimum tap for 5DJ motor is 80%.

### Table 17: Unit mounted low voltage solid state starter models (economizer)

| Model SSS- | Maximum LRA | Minimum FLA | Maximum FLA | Rated voltage | Actual voltage | Phase | Hz |
|---|---|---|---|---|---|---|---|
| **7L-40B** | 1556 | 35 | 260 | 380 | 380 | 3 | 60 |
| **7L-46B** | 1556 | 35 | 260 | 460 | 440/460/480 | 3 | 60 |
| **7L-50B** | 1556 | 35 | 260 | 400 | 380/400/415 | 3 | 50 |
| **14L-40B** | 3111 | 65 | 510 | 380 | 380 | 3 | 60 |
| **14L-46B** | 3111 | 65 | 510 | 460 | 440/460/480 | 3 | 60 |
| **14L-50B** | 3111 | 65 | 510 | 400 | 380/400/415 | 3 | 50 |

### Table 18: Unit mounted medium voltage solid state starter models

| Model | Starter type | Size (in.) H x W x D | Qty | Line | | Motor | | |
|---|---|---|---|---|---|---|---|---|
| | | | | Voltage | Hz | Max LRA | 45% LRA | Max FLA |
| **UMVSSS0853K389-80** | 13 | 60 x 59 x 27 | 1 | 2300 | 60 | 1896 | 853 | 389 |
| **UMVSSS1708K389-80** | | | | | | 3796 | 1708 | 389 |
| **UMVSSS0853K190-84** | 13 | 60 x 59 x 27 | 1 | 4160 | 60 | 1896 | 853 | 190 |
| **UMVSSS0853K280-84** | | | | | | | | 280 |
| **UMVSSS0853K389-84** | | | | | | | | 389 |
| **UMVSSS1708K389-84** | | | | | | 3796 | 1708 | 389 |
| **UMVSSS 0853K280-94** | 13 | 60 x 59 x 27 | 1 | 3300 | 60 | 1896 | 853 | 280 |
| **UMVSSS 0853K389-94** | | | | | | | | 389 |
| **UMVSSS 1708K389-94** | | | | | | 3796 | 1708 | 389 |
| **UMVSSS 0853K280-92** | 13 | 60 x 59 x 27 | 1 | 3300 | 50 | 1896 | 853 | 280 |
| **UMVSSS 0853K389-92** | | | | | | | | 389 |
| **UMVSSS 1708K389-92** | | | | | | 3796 | 1708 | 389 |

### Figure 38: Unit mounted medium voltage solid state starter nomenclature

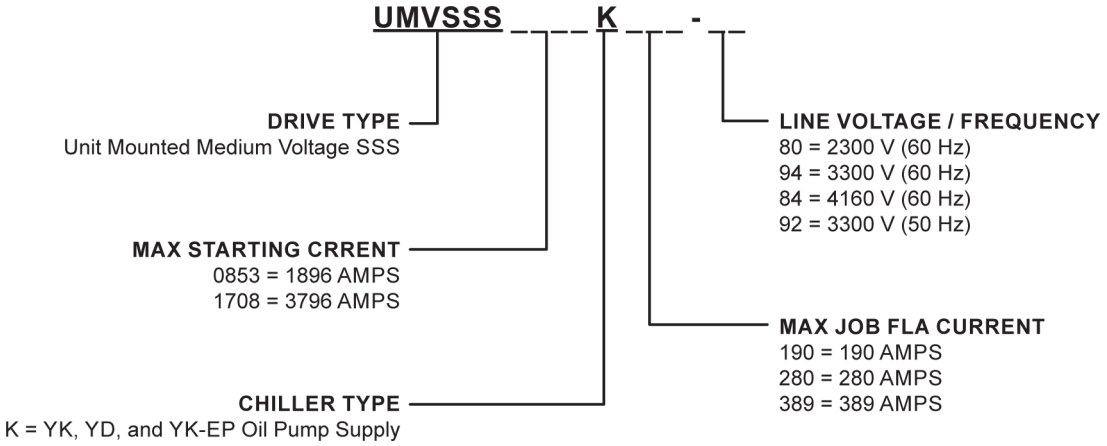

## Table 19: Remote mounted medium voltage variable speed drive models (primary)

| Model | Starter type | Size (in.) H x W x D | Qty | 9th digit nomenclature | Line | | Motor | | |
|---|---|---|---|---|---|---|---|---|---|
| | | | | | Voltage | Hz | Voltage | Hz | Max FLA |
| **MVVSD1500RK-80** | 11 | 174 x 50 x 104 | 1 | - | 2300 | 60 | 2300 | 60 | 336 |
| **MVVSD1750RK-80** | 11 | 174 x 50 x 104 | 1 | - | 2300 | 60 | 2300 | 60 | 392 |
| **MVVSD2250RK-80** | 11 | 222 x 50 x 104 | 1 | - | 2300 | 60 | 2300 | 60 | 494 |
| **MVVSD2500RK-80** | 11 | 222 x 50 x 104 | 1 | - | 2300 | 60 | 2300 | 60 | 561 |
| **MVVSD1250RK-92** | 11 | 122 x 44 x 104 | 1 | 5 | 3300 | 50 | 3300 | 50 | 195 |
| **MVVSD1500RK-92** | 11 | 122 x 44 x 104 | 1 | 5 | 3300 | 50 | 3300 | 50 | 235 |
| **MVVSD1750RK-92** | 11 | 164 x 50 x 104 | 1 | 5 | 3300 | 50 | 3300 | 50 | 274 |
| **MVVSD2000RK-92** | 11 | 164 x 50 x 104 | 1 | 5 | 3300 | 50 | 3300 | 50 | 312 |
| **MVVSD2250RK-92** | 11 | 174 x 50 x 104 | 1 | 5 | 3300 | 50 | 3300 | 50 | 345 |
| **MVVSD2500RK-92** | 11 | 174 x 50 x 104 | 1 | 5 | 3300 | 50 | 3300 | 50 | 391 |
| **MVVSD1250RK-94** | 11 | 122 x 44 x 104 | 1 | - | 3300 | 60 | 3300 | 60 | 195 |
| **MVVSD1500RK-94** | 11 | 122 x 44 x 104 | 1 | - | 3300 | 60 | 3300 | 60 | 235 |
| **MVVSD1750RK-94** | 11 | 164 x 50 x 104 | 1 | - | 3300 | 60 | 3300 | 60 | 274 |
| **MVVSD2000RK-94** | 11 | 164 x 50 x 104 | 1 | - | 3300 | 60 | 3300 | 60 | 312 |
| **MVVSD2250RK-94** | 11 | 174 x 50 x 104 | 1 | - | 3300 | 60 | 3300 | 60 | 345 |
| **MVVSD2500RK-94** | 11 | 174 x 50 x 104 | 1 | - | 3300 | 60 | 3300 | 60 | 391 |
| **MVVSD1250RK-84** | 11 | 122 x 44 x 104 | 1 | - | 4160 | 60 | 4160 | 60 | 155 |
| **MVVSD1500RK-84** | 11 | 122 x 44 x 104 | 1 | - | 4160 | 60 | 4160 | 60 | 186 |
| **MVVSD1750RK-84** | 11 | 122 x 44 x 104 | 1 | - | 4160 | 60 | 4160 | 60 | 217 |
| **MVVSD2000RK-84** | 11 | 122 x 44 x 104 | 1 | - | 4160 | 60 | 4160 | 60 | 248 |
| **MVVSD2250RK-84** | 11 | 164 x 50 x 104 | 1 | - | 4160 | 60 | 4160 | 60 | 274 |
| **MVVSD2500RK-84** | 11 | 164 x 50 x 104 | 1 | - | 4160 | 60 | 4160 | 60 | 310 |
| **MVVSD1250RK-95** | 16 | 122 x 44 x 104 | 1 | M | 6600 | 50 | 4160 | 60 | 155 |
| **MVVSD1500RK-95** | 16 | 122 x 44 x 104 | 1 | M | 6600 | 50 | 4160 | 60 | 186 |
| **MVVSD1750RK-95** | 16 | 122 x 44 x 104 | 1 | M | 6600 | 50 | 4160 | 60 | 217 |
| **MVVSD2000RK-95** | 16 | 122 x 44 x 104 | 1 | M | 6600 | 50 | 4160 | 60 | 248 |
| **MVVSD2250RK-95** | 16 | 164 x 50 x 104 | 1 | M | 6600 | 50 | 4160 | 60 | 274 |
| **MVVSD2500RK-95** | 16 | 164 x 50 x 104 | 1 | M | 6600 | 50 | 4160 | 60 | 310 |
| **MVVSD1250RK-85** | 16 | 122 x 44 x 104 | 1 | - | 6600 | 60 | 4160 | 60 | 155 |
| **MVVSD1500RK-85** | 16 | 122 x 44 x 104 | 1 | - | 6600 | 60 | 4160 | 60 | 186 |
| **MVVSD1750RK-85** | 16 | 122 x 44 x 104 | 1 | - | 6600 | 60 | 4160 | 60 | 217 |
| **MVVSD2000RK-85** | 16 | 122 x 44 x 104 | 1 | - | 6600 | 60 | 4160 | 60 | 248 |
| **MVVSD2250RK-85** | 16 | 164 x 50 x 104 | 1 | - | 6600 | 60 | 4160 | 60 | 274 |
| **MVVSD2500RK-85** | 16 | 164 x 50 x 104 | 1 | - | 6600 | 60 | 4160 | 60 | 310 |
| **MVVSD1250RK-98** | 16 | 236 x 44 x 104 | 1 | M | 10000 | 50 | 4160 | 60 | 155 |
| **MVVSD1500RK-98** | 16 | 236 x 44 x 104 | 1 | M | 10000 | 50 | 4160 | 60 | 186 |
| **MVVSD1750RK-98** | 16 | 236 x 44 x 104 | 1 | M | 10000 | 50 | 4160 | 60 | 217 |
| **MVVSD2000RK-98** | 16 | 236 x 44 x 104 | 1 | M | 10000 | 50 | 4160 | 60 | 248 |
| **MVVSD2250RK-98** | 16 | 278 x 50 x 104 | 1 | M | 10000 | 50 | 4160 | 60 | 274 |
| **MVVSD2500RK-98** | 16 | 278 x 50 x 104 | 1 | M | 10000 | 50 | 4160 | 60 | 310 |
| **MVVSD1250RK-96** | 16 | 236 x 44 x 104 | 1 | M | 11000 | 50 | 4160 | 60 | 155 |
| **MVVSD1500RK-96** | 16 | 236 x 44 x 104 | 1 | M | 11000 | 50 | 4160 | 60 | 186 |
| **MVVSD1750RK-96** | 16 | 236 x 44 x 104 | 1 | M | 11000 | 50 | 4160 | 60 | 217 |
| **MVVSD2000RK-96** | 16 | 236 x 44 x 104 | 1 | M | 11000 | 50 | 4160 | 60 | 248 |
| **MVVSD2250RK-96** | 16 | 278 x 50 x 104 | 1 | M | 11000 | 50 | 4160 | 60 | 274 |
| **MVVSD2500RK-96** | 16 | 278 x 50 x 104 | 1 | M | 11000 | 50 | 4160 | 60 | 310 |
| **MVVSD1250RK-86** | 16 | 236 x 44 x 104 | 1 | - | 12470 | 60 | 4160 | 60 | 155 |
| **MVVSD1500RK-86** | 16 | 236 x 44 x 104 | 1 | - | 12470 | 60 | 4160 | 60 | 186 |
| **MVVSD1750RK-86** | 16 | 236 x 44 x 104 | 1 | - | 12470 | 60 | 4160 | 60 | 217 |
| **MVVSD2000RK-86** | 16 | 236 x 44 x 104 | 1 | - | 12470 | 60 | 4160 | 60 | 248 |
| **MVVSD2250RK-86** | 16 | 278 x 50 x 104 | 1 | - | 12470 | 60 | 4160 | 60 | 274 |

### Table 19: Remote mounted medium voltage variable speed drive models (primary)

| Model | Starter type | Size (in.) H x W x D | Qty | 9th digit nomenclature | Line | | Motor | | |
|---|---|---|---|---|---|---|---|---|---|
| | | | | | Voltage | Hz | Voltage | Hz | Max FLA |
| **MVVSD2500RK-86** | 16 | 278 x 50 x 104 | 1 | - | 12470 | 60 | 4160 | 60 | 310 |
| **MVVSD1250RK-88** | 16 | 236 x 44 x 104 | 1 | - | 13800 | 60 | 4160 | 60 | 155 |
| **MVVSD1500RK-88** | 16 | 236 x 44 x 104 | 1 | - | 13800 | 60 | 4160 | 60 | 186 |
| **MVVSD1750RK-88** | 16 | 236 x 44 x 104 | 1 | - | 13800 | 60 | 4160 | 60 | 217 |
| **MVVSD2000RK-88** | 16 | 236 x 44 x 104 | 1 | - | 13800 | 60 | 4160 | 60 | 248 |
| **MVVSD2250RK-88** | 16 | 278 x 50 x 104 | 1 | - | 13800 | 60 | 4160 | 60 | 274 |
| **MVVSD2500RK-88** | 16 | 278 x 50 x 104 | 1 | - | 13800 | 60 | 4160 | 60 | 310 |

### Figure 39: Remote mounted medium voltage variable speed drive nomenclature

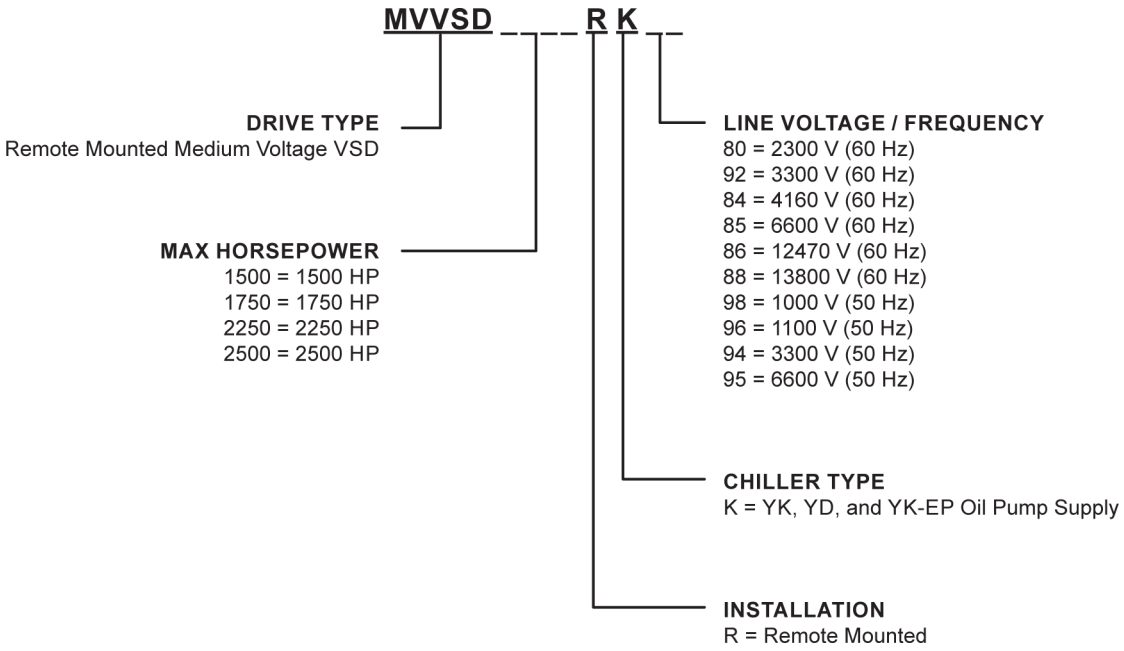

### Table 20: Remote mounted medium voltage solid state starter models

| Model | Starter type | Size (in.) H x W x D | Qty | Line | | Motor | | |
|---|---|---|---|---|---|---|---|---|
| | | | | Voltage | Hz | Max LRA | 45% LRA | Max FLA |
| **MVSSS0853RK310-80** | 12 | 92 x 36 x 36 | 1 | 2300 | 60 | 1896 | 853 | 310 |
| **MVSSS0853RK360-80** | | | | | | | | 360 |
| **MVSSS1708RK360-80** | | | | | | 3796 | 1708 | 360 |
| **MVSSS1708RK550-80** | | 92 x 72 x 36 | | | | | | 550 |
| **MVSSS0853RK190-84** | 12 | 92 x 36 x 36 | 1 | 4160 | 60 | 1896 | 853 | 190 |
| **MVSSS0853RK280-84** | | | | | | | | 280 |
| **MVSSS0853RK310-84** | | | | | | | | 310 |
| **MVSSS0853RK360-84** | | | | | | | | 360 |
| **MVSSS1708RK360-84** | | | | | | 3796 | 1708 | 360 |
| **MVSSS1708RK550-84** | | 92 x 72 x 36 | | | | | | 550 |
| **MVSSS0853RK280-94** | 12 | 92 x 36 x 36 | 1 | 3300 | 60 | 1896 | 853 | 280 |
| **MVSSS0853RK310-94** | | | | | | | | 310 |
| **MVSSS0853RK360-94** | | | | | | | | 360 |
| **MVSSS1708RK360-94** | | | | | | 3796 | 1708 | 360 |
| **MVSSS1708RK550-94** | | 92 x 72 x 36 | | | | | | 550 |
| **MVSSS0853RK280-92** | 12 | 92 x 36 x 36 | 1 | 3300 | 50 | 1896 | 853 | 280 |
| **MVSSS0853RK310-92** | | | | | | | | 310 |
| **MVSSS0853RK360-92** | | | | | | | | 360 |
| **MVSSS1708RK360-92** | | | | | | 3796 | 1708 | 360 |
| **MVSSS1708RK550-92** | | 92 x 72 x 36 | | | | | | 550 |

### Figure 40: Remote mounted medium voltage solid state starter nomenclature

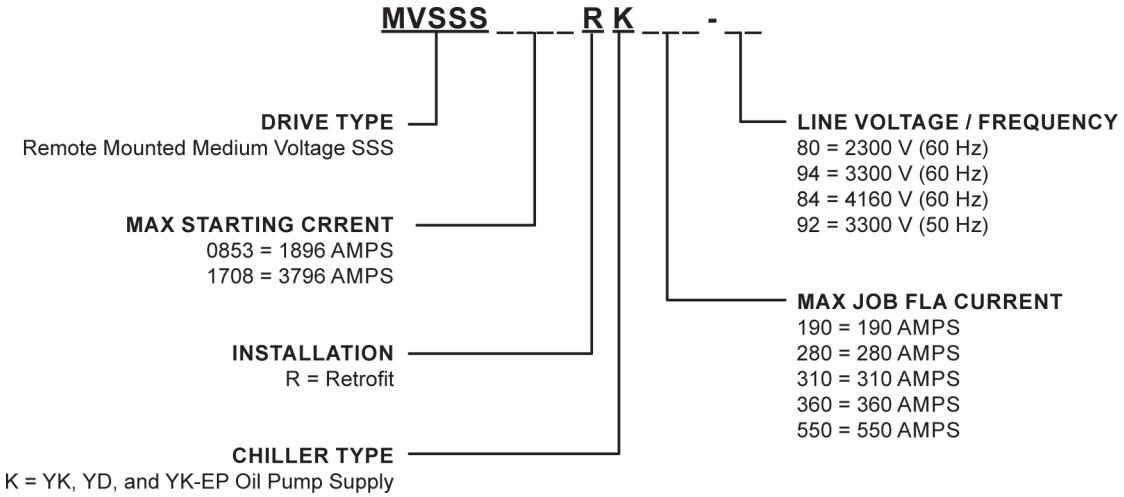

# Dimensions

## YK-EP Style B unit dimensions

**Figure 41: YK-EP Style B side view dimensions**

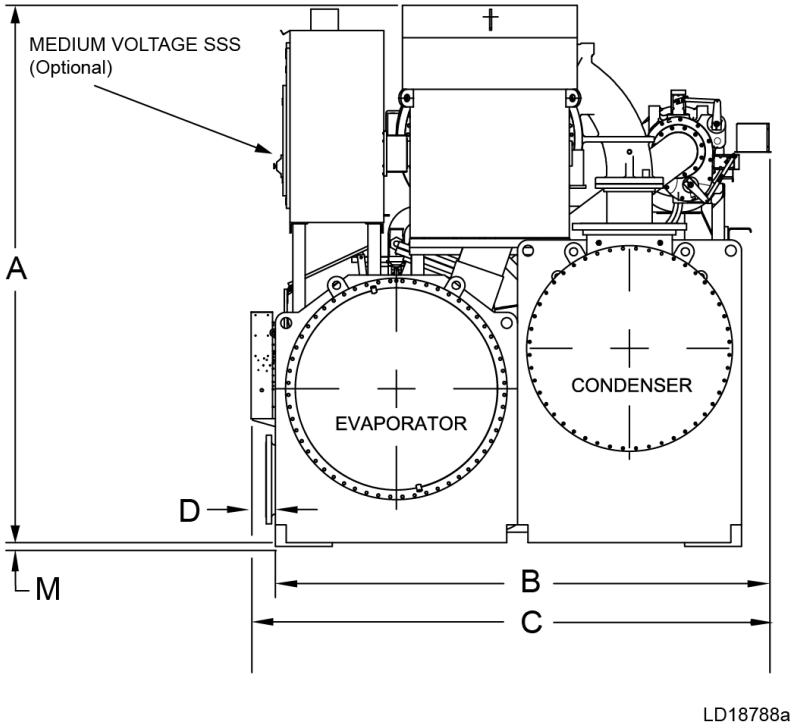


**Figure 42: YK-EP Style B front view dimensions**

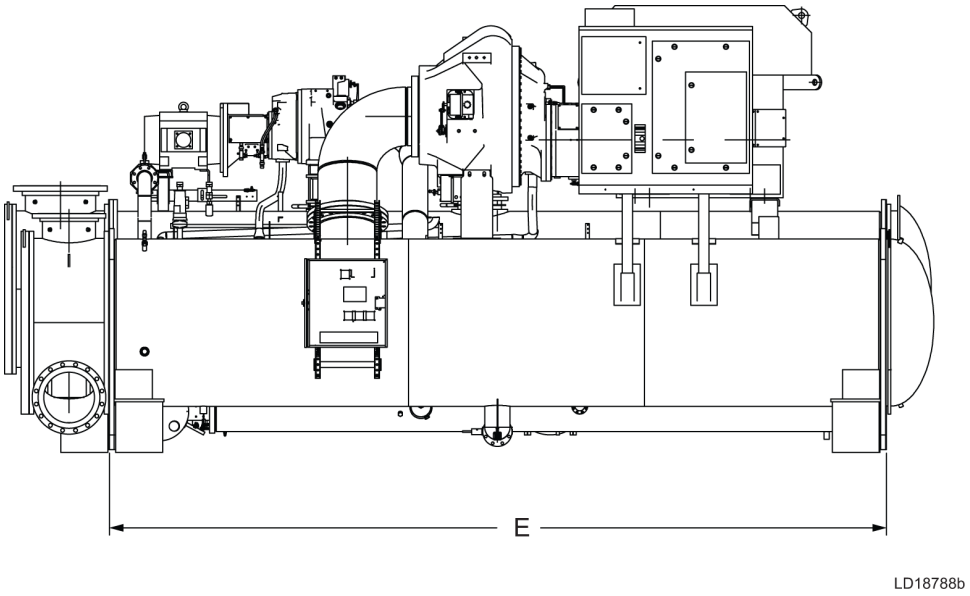

### Table 21: YK-EP unit dimensions

| Dimension type | Evaporator-condenser shell codes dimensions, ft in. (mm) | | | |
|---|---|---|---|---|
| | B-B | B-C | C-B | C-C |
| A | 12 ft 9 in. (3,886) | 13 ft 0 in. (3,962) | 13 ft 3 in. (4,039) | 14 ft 5 in. (4,394) |
| B | 12 ft 0 in. (3,658) | 11 ft 10 in. (3,606) | 12 ft 6 in. (3,810) | 13 ft 3 in. (4,039) |
| C | 12 ft 8 in. (3,861) | 12 ft 6 in. (3,810) | 13 ft 2 in. (4,013) | 13 ft 11 in. (4,242) |
| D | 8 in. (203) | 8 in. (203) | 8 in. (203) | 8 in. (203) |
| E | 22 ft 0 in. (6,706) | 22 ft 0 in. (6,706) | 22 ft 0 in. (6,706) | 22 ft 0 in. (6,706) |

### Table 22: Additional operating height clearance

| Type of chiller mounting | M |
|---|---|
| Neoprene pad isolators | 1 in. (25 mm) |
| Spring isolators 1 in. deflection | 1 in. (25 mm) |
| Direct mount | 3/4 in. (19 mm) |

**Note:**

1. All dimensions are approximate. Certified dimensions are available on request.
2. Water nozzles can be located on either end of unit. Add 1/2 in. (13 mm) to nozzle length for flanges connections.
3. To determine overall height, add dimension M for the appropriate isolator type.
4. Use of motors with motor hoods may increase overall unit dimensions.
5. Tubesheets are provided with jacking point notches.
6. Control panel in the shipment position will reduce overall width by 8 in. (203 mm).

# Knocked-down unit component dimensions

**Figure 43: Knocked-down unit component dimensions, evaporator**

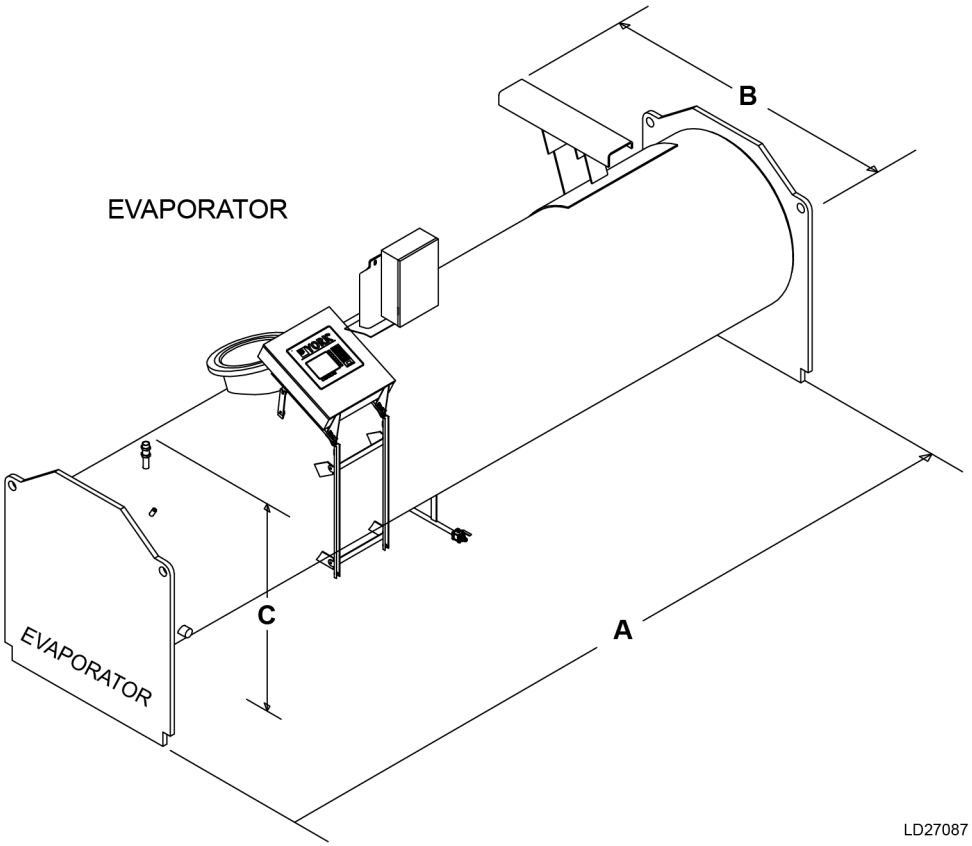


**Table 23: Evaporator section dimensions**

| Unit model shells | Dimensions, ft in. (mm) | | |
|---|---|---|---|
| | A | B | C |
| B | 22 ft 0 in. (6706) | 7 ft 2 in. (2184) | 8 ft 5 in. (2565) |
| C | 22 ft 0 in. (6706) | 8 ft 0 in. (2438) | 8 ft 8 in. (2642) |

ⓘ **Note:**

1. Add the associated dimension for compact or marine waterboxes to shell length.
2. Add 6 in. to height if skids are included.

**Figure 44: Knocked-down unit component dimensions, condenser**

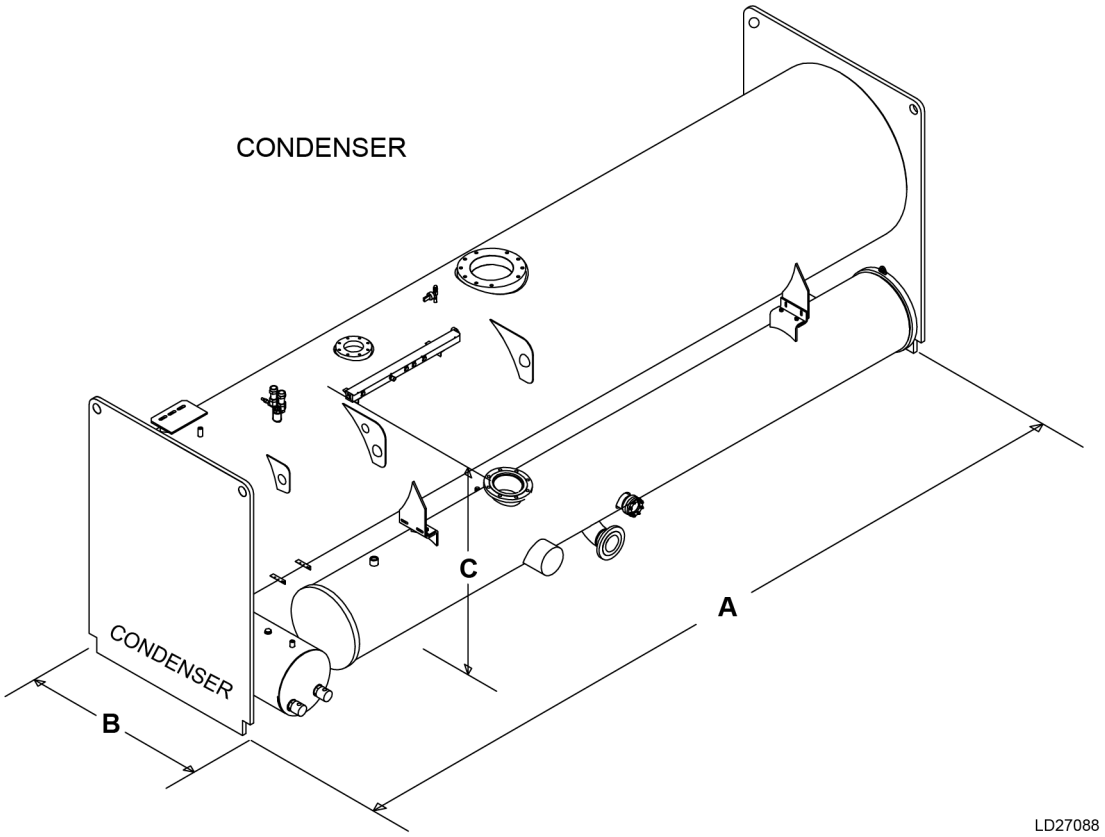


**Table 24: Condenser section dimensions**

| Unit model shells | Dimensions, ft in. (mm) | | |
|---|---|---|---|
| | A | B | C |
| B | 22 ft 0 in. (6706) | 6 ft 9 in. (2057) | 8 ft 9 in. (2667) |
| C | 22 ft 0 in. (6706) | 7 ft 7 in. (2312) | 9 ft 2 in. (2794) |

**Note:**

1. Add the associated dimension for compact or marine waterboxes to shell length.
2. Add 6 in. to height if skids are included.

**Figure 45: Knocked-down unit component dimensions, drivelines**

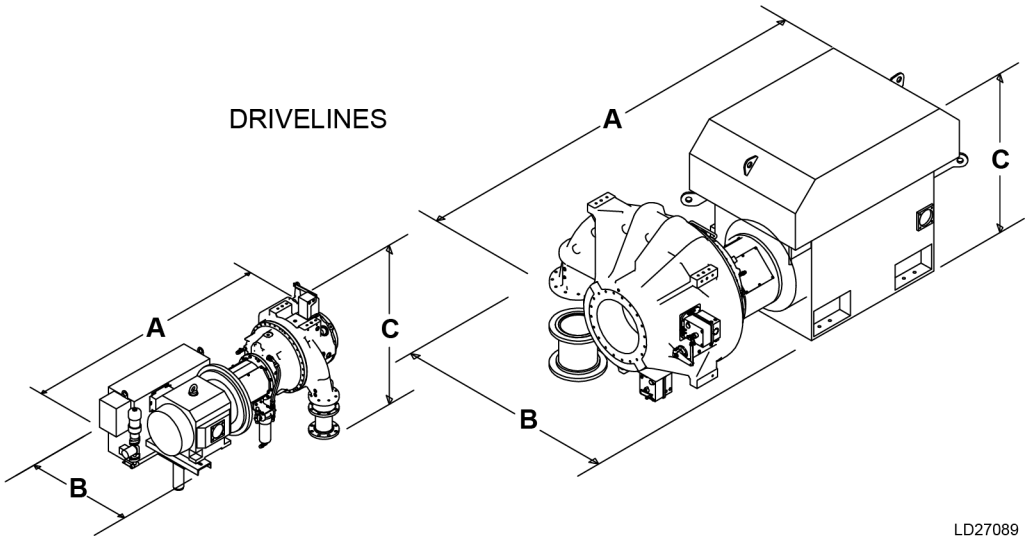


**Table 25: Driveline section dimensions**

| Unit model compressor | Dimensions, ft in. (mm) | | |
|---|---|---|---|
| | A | B | C |
| **Primary - K7/KS** | 13 ft 0 in. (3962) | 7 ft 0 in. (2134) | 7 ft 0 in. (2134) |
| **Economizer - Q3** | 8 ft 0 in. (2438) | 5 ft 0 in. (1524) | 4 ft 10-1/2 in. (1486) |

**Note:**

1. Consider the suction/discharge elbows, not depicted, as well as YK-EP always having both the primary and economizer drivelines per unit.

2. Dimensions include skids.

3. Dimensions based on largest motor (5612 frame).

# Evaporators – compact waterboxes

## Figure 46: One pass

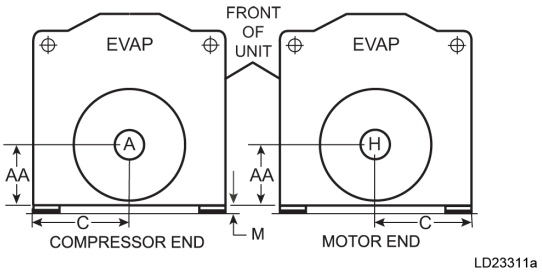


| For shells B,C | |
|---|---|
| Evaporator 1 pass | |
| In | Out |
| A | H |
| H | A |

## Figure 47: Two pass

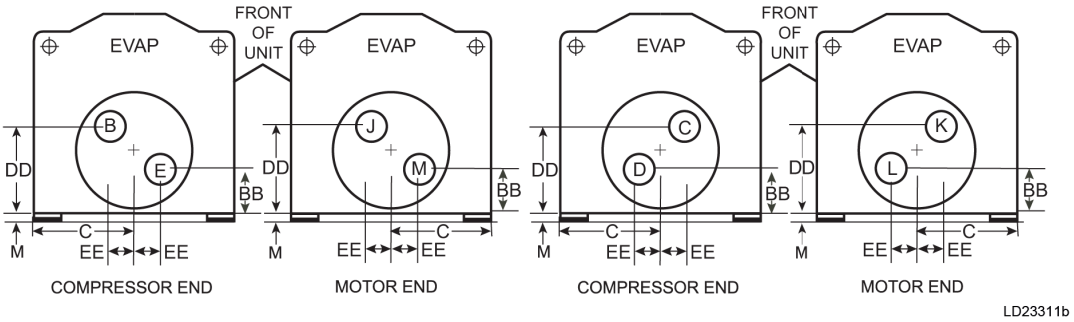


| For shells: B,C | |
|---|---|
| Evaporator 2 pass | |
| In | Out |
| D | C |
| E | B |
| L | K |
| M | J |

## Figure 48: Three pass

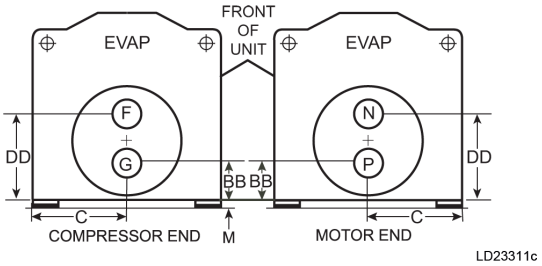


| For shells: B, C | |
|---|---|
| Evaporator 3 pass | |
| In | Out |
| G | N |
| P | F |

**Table 26: Evaporator - compact waterboxes end dimensions**

| Evap shell code | 1 pass | | | 2 pass | | | | | 3 pass | | | |
|---|---|---|---|---|---|---|---|---|---|---|---|---|
| | Nozzle pipe size (in.) | Nozzle dimensions, ft-in. (mm) | | Nozzle pipe size (in.) | Nozzle dimensions, ft-in. (mm) | | | | Nozzle pipe size (in.) | Nozzle dimensions, ft-in. (mm) | | |
| | | C | AA | | C | BB | DD | EE | | C | BB | DD |
| **B** | 20 in. | 2 ft 10 in. (864) | 3 ft 7 1/4 in. (1,099) | 18 in. | 2 ft 10 in. (864) | 2 ft 5 1/4 in. (743) | 4 ft 11 3/4 in. (1,519) | 0 ft 10 1/2 in. (268) | 14 in. | 2 ft 10 in. (864) | 2 ft 1 3/4 in. (656) | 5 ft 3 1/4 in. (1,607) |
| **C** | 20 in. | 3 ft 1 1/2 in. (954) | 3 ft 11 3/4 in. (1,214) | 18 in. | 3 ft 1 1/2 in. (954) | 2 ft 9 3/4 in. (859) | 5 ft 4 in. (1,626) | 0 ft 11 in. (280) | 14 in. | 3 ft 1 1/2 in. (954) | 2 ft 9 3/4 in. (859) | 5 ft 9 7/8 in. (1,776) |

**Note:**

1. Standard water nozzles are furnished as welding stub-outs with ANSI/AWWA C-606 grooves, allowing the option of welding, flanges, or use of ANSI/AWWA C-606 couplings. Factory-installed, class 150 (ANSI B16.5, round slip-on, forged carbon steel with 1/16 in. (2mm) raised face), water flanged nozzles are optional (add 1/2 in. (13 mm) to nozzle length). Companion flanges, nuts, bolts, and gaskets are not furnished.
2. One-, two- and three-pass nozzle arrangements are available only in pairs shown and for all shell codes. Any pair of evaporator nozzles may be used in combination with any pair of condenser nozzles.
3. Evaporator and condenser water must enter the waterbox through the bottom connection to achieve rated performance.
4. Connected piping should allow for removal of compact waterboxes for tube access and cleaning.
5. Add dimension **M** from Table 22 for the appropriate isolator type.
6. Standard 150 psig (10.3 barg) design pressure boxes shown.

**Figure 49: Evaporators – compact waterboxes side dimensions**

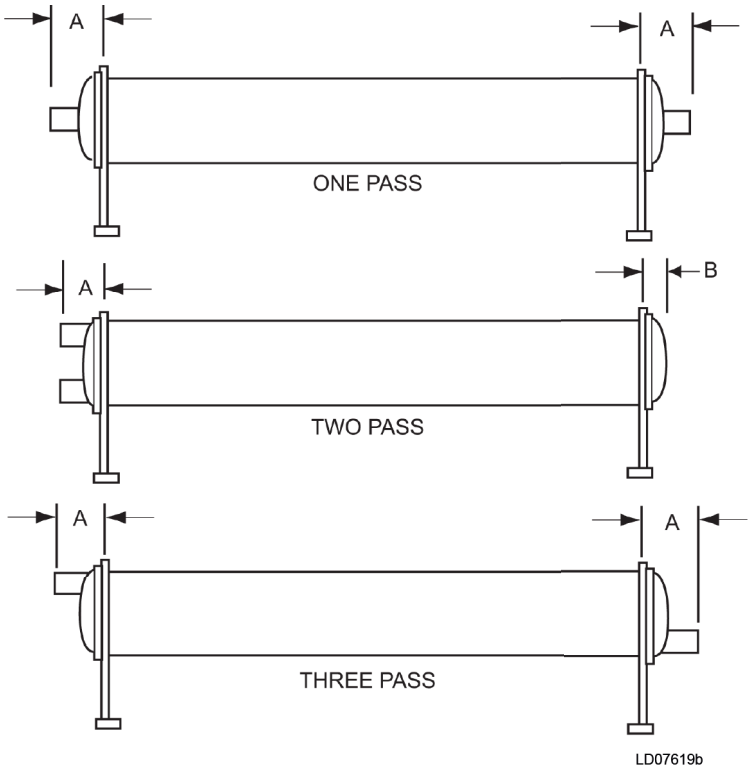


**Table 27: Evaporator nozzle dimensions, ft-in. (mm) vs. design working pressure, psig (mpa)**

| Evap. shell code | 1 pass | | 2 pass | | | | 3 pass | |
|---|---|---|---|---|---|---|---|---|
| | A | | A | | B | | A | |
| | 150 (1.14) | 300 (2.17) | 150 (1.14) | 300 (2.17) | 150 (1.14) | 300 (2.17) | 150 (1.14) | 300 (2.17) |
| **B** | 1 ft 11 5/8 in. (600) | O | 1 ft 11 5/8 in. (600) | O | 1 ft 4 3/8 in. (416) | O | 1 ft 11 5/8 in. (600) | O |
| **C** | 2 ft 1 in. (635) | O | 2 ft 1 in. (635) | O | 1 ft 6 1/4 in. (464) | O | 2 ft 1 in. (635) | O |

**Note:**

O = Requires a Special Quote

# Evaporators – marine waterboxes

### Figure 50: One pass

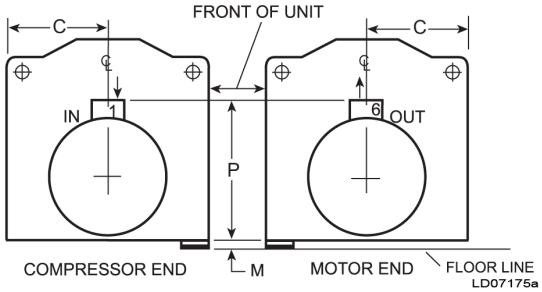


| For shells: B, C | |
|---|---|
| Evaporator 1 pass | |
| In | Out |
| 1 | 6 |
| 6 | 1 |

### Figure 51: Two pass

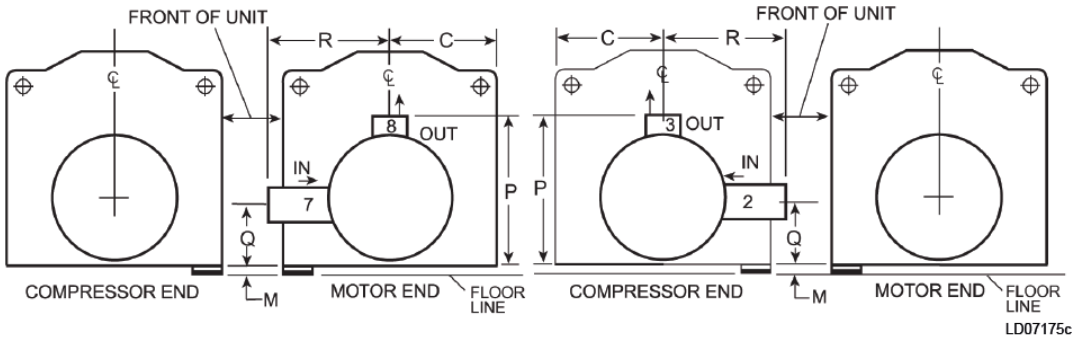


| For shells: B, C | |
|---|---|
| Evaporator 2 pass | |
| In | Out |
| 2 | 3 |
| 7 | 8 |

### Figure 52: Three pass

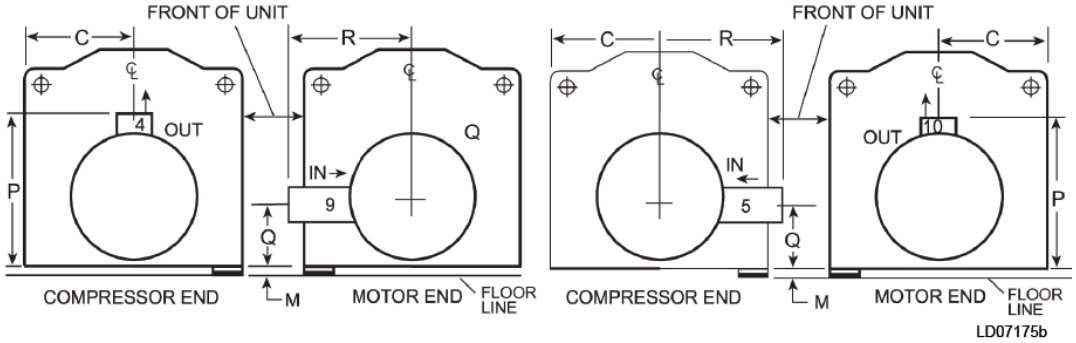


| For shells: B, C | |
|---|---|
| Evaporator 3 pass | |
| In | Out |
| 5 | 10 |
| 9 | 4 |

**Table 28: Evaporator - marine waterboxes end dimensions**

| Evap shell code | 1 pass | | | 2 pass | | | | | 3 pass | | | | |
|---|---|---|---|---|---|---|---|---|---|---|---|---|---|
| | Nozzle pipe size (in.) | Nozzle dimensions, ft-in. (mm) | | Nozzle pipe size (in.) | Nozzle dimensions, ft-in. (mm) | | | | Nozzle pipe size (in.) | Nozzle dimensions, ft-in. (mm) | | | |
| | | C | P | | C | P | Q | R | | C | P | Q | R |
| **B** | 20 in. | 2 ft 10 in. (864) | 6 ft 9 5/8 in. (2,075) | 18 in. | 2 ft 10 in. (864) | 6 ft 9 5/8 in. (2,075) | 1 ft 7 1/2 in. (497) | 3 ft 0 1/8 in. (918) | 14 in. | 2 ft 10 in. (864) | 6 ft 9 5/8 in. (2,075) | 1 ft 7 1/2 in. (497) | 3 ft 0 1/8 in. (918) |
| **C** | 20 in. | 3 ft 1 1/2 in. (954) | 7 ft 5 1/8 in. (2,264) | 18 in. | 3 ft 1 1/2 in. (954) | 7 ft 5 1/8 in. (2,264) | 2 ft 1 in. (635) | 3 ft 0 3/4 in. (935) | 14 in. | 3 ft 1 1/2 in. (954) | 7 ft 5 1/8 in. (2,264) | 2 ft 1 in. (635) | 3 ft 0 3/4 in. (935) |

**Note:**

1. All dimensions are approximate. Certified dimensions are available upon request.

2. Standard water nozzles are Schedule 40 pipe size, furnished as welding stub-outs with ANSI/AWWA C-606 grooves, allowing the option of welding, flanges, or use of ANSI/AWWA C-606 couplings. Factory-installed, class 150 (ANSI B16.5, round slip-on, forged carbon steel with 1/16 in. (2 mm) raised face), water flanged nozzles are optional (add 1/2 in. (13 mm) to nozzle length). Companion flanges, nuts, bolts, and gaskets are not furnished.

3. One-, two-, and three-pass nozzle arrangements are available only in pairs shown and for all shell codes. Any pair of evaporator nozzles may be used in combination with any pair of condenser nozzles. Compact waterboxes on one heat exchanger may be used with Marine Waterboxes on the other heat exchanger.

4. Add dimension **M** from Table 22 for the appropriate isolator type.

**Figure 53: Dimensions**

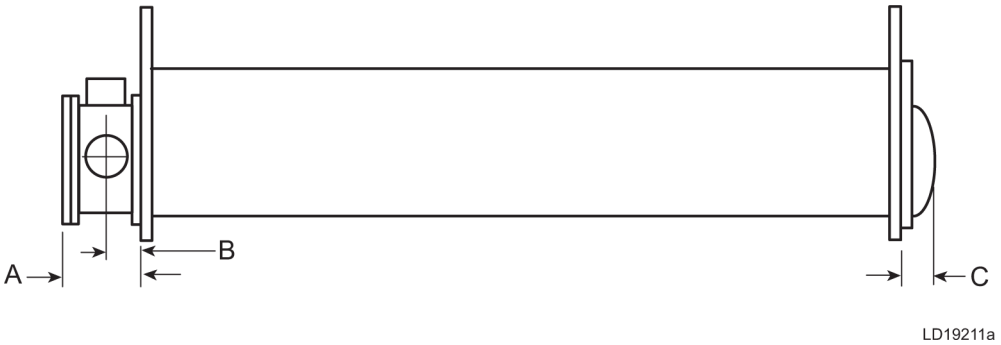


**Table 29: Evaporator nozzle dimensions (1 and 2 pass), ft-in. (mm) vs design working pressure, psig (mpa)**

| Evap shell code | 1 pass | | | | 2 pass | | | | | |
|---|---|---|---|---|---|---|---|---|---|---|
| | A | | B | | A | | B | | C | |
| | 150 (1.14) | 300 (2.17) | 150 (1.14) | 300 (2.17) | 150 (1.14) | 300 (2.17) | 150 (1.14) | 300 (2.17) | 150 (1.14) | 300 (2.17) |
| B | 2 ft 8 in. (813) | O | 1 ft 2 5/8 in. (373) | O | 2 ft 6 in. (762) | O | 1 ft 1 5/8 in. (348) | O | 1 ft 4 3/8 in. (416) | O |
| C | 2 ft 6 1/2 in. (826) | O | 1 ft 2 5/8 in. (373) | O | 2 ft 6 1/2 in. (826) | O | 1 ft 1 1/2 in. (343) | O | 1 ft 6 1/4 in. (464) | O |

**Table 30: Evaporator nozzle dimensions (3 pass), ft-in. (mm) vs design working pressure, psig (mpa)**

| Evap shell code | 3 pass | | | |
|---|---|---|---|---|
| | A | | B | C |
| | 150 (1.14) | 300 (2.17) | 150 (1.14) | 300 (2.17) |
| B | 2 ft 6 in. (762) | O | 1 ft 1 5/8 in. (348) | O |
| C | 2 ft 6 1/2 in. (826) | O | 1 ft 1 1/2 in. (343) | O |

**Note:**

1. O = Available for Special Quote.
2. All dimensions are approximate. Certified dimensions are available upon request.
3. Standard water nozzles are Schedule 40 pipe size, furnished as welding stub-outs with ANSI/AWWA C-606 grooves, allowing the option of welding, flanges, or use of ANSI/AWWA C-606 couplings. Factory-installed, class 150 (ANSI B16.5, round slip-on, forged carbon steel with 1/16 in. (2 mm) raised face), water flanged nozzles are optional (add 1/2 in. (13 mm) to nozzle length). Companion flanges, nuts, bolts, and gaskets are not furnished.
4. One-, two-, and three-pass nozzle arrangements are available only in pairs shown and for all shell codes. Any pair of evaporator nozzles may be used in combination with any pair of condenser nozzles. Compact waterboxes on one heat exchanger may be used with marine waterboxes on the other heat exchanger.

# Condensers – compact waterboxes

## Figure 54: One pass

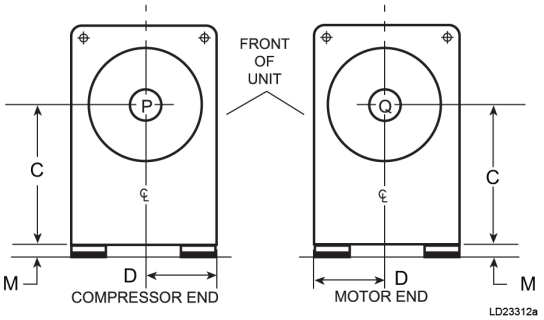


| For shells: B, C | |
|---|---|
| Condenser 1 pass | |
| **In** | **Out** |
| P | Q |
| Q | P |

## Figure 55: Two pass

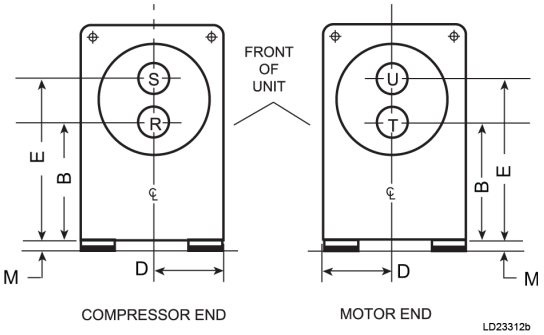


| For shells: B, C | |
|---|---|
| Condenser 2 pass | |
| **In** | **Out** |
| R | S |
| T | U |

## Figure 56: Three pass

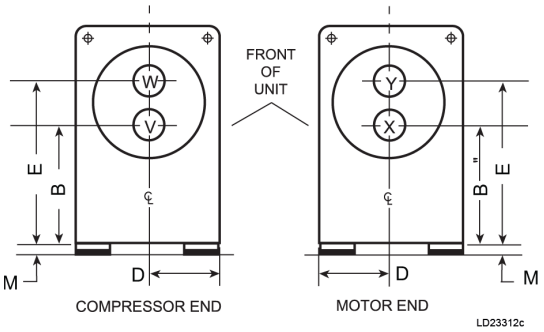


| For shells: B, C | |
|---|---|
| Condenser 3 pass | |
| **In** | **Out** |
| V | Y |
| X | W |

**Table 31: Condenser - compact waterboxes end dimensions**

| Cond. shell code | 1 pass | | | 2 pass | | | | 3 pass | | | |
|---|---|---|---|---|---|---|---|---|---|---|---|
| | Nozzle pipe size (in.) | Nozzle dimensions, ft-in. (mm) | | Nozzle pipe size (in.) | Nozzle dimensions, ft-in. (mm) | | | Nozzle pipe size (in.) | Nozzle dimensions, ft-in. (mm) | | |
| | | D | C | | D | B | E | | D | B | E |
| **B** | 24 in. | 2 ft 7 1/2 in. (802) | 4 ft 6 5/8 in. (1,389) | 18 in. | 2 ft 7 1/2 in. (802) | 3 ft 4 1/8 in. (1,020) | 5 ft 9 1/8 in. (1,756) | 16 in. | 2 ft 7 1/2 in. (802) | 3 ft 4 1/8 in. (1,020) | 5 ft 9 1/8 in. (1,756) |
| **C** | 24 in. | 2 ft 10 in. (864) | 4 ft 8 3/8 in. (1,432) | 20 in. | 2 ft 10 in. (864) | 3 ft 4 3/8 in. (1,026) | 6 ft 0 1/8 in. (1,839) | 16 in. | 2 ft 10 in. (864) | 3 ft 4 3/8 in. (1,026) | 6 ft 0 1/8 in. (1,839) |

**Note:**

1. Standard water nozzles are furnished as welding stub-outs with ANSI/AWWA C-606 grooves, allowing the option of welding, flanges, or use of ANSI/AWWA C-606 couplings. Factory-installed, class 150 (ANSI B16.5, round slip-on, forged carbon steel with 1/16 in. (2 mm) raised face), water flanged nozzles are optional (add 1/2 in. to nozzle length). Companion flanges, nuts, bolts, and gaskets are not furnished.
2. One-, two- and three-pass nozzle arrangements are available only in pairs shown and for all shell codes. Any pair of evaporator nozzles may be used in combination with any pair of condenser nozzles.
3. Evaporator and condenser water must enter the waterbox through the bottom connection to achieve rated performance.
4. Connected piping should allow for removal of compact waterboxes for tube access and cleaning.
5. Add dimension **M** from Table 22 for the appropriate isolator type.
6. Standard 150 psig (10.3 barg) design pressure boxes shown.

**Figure 57: Dimensions**

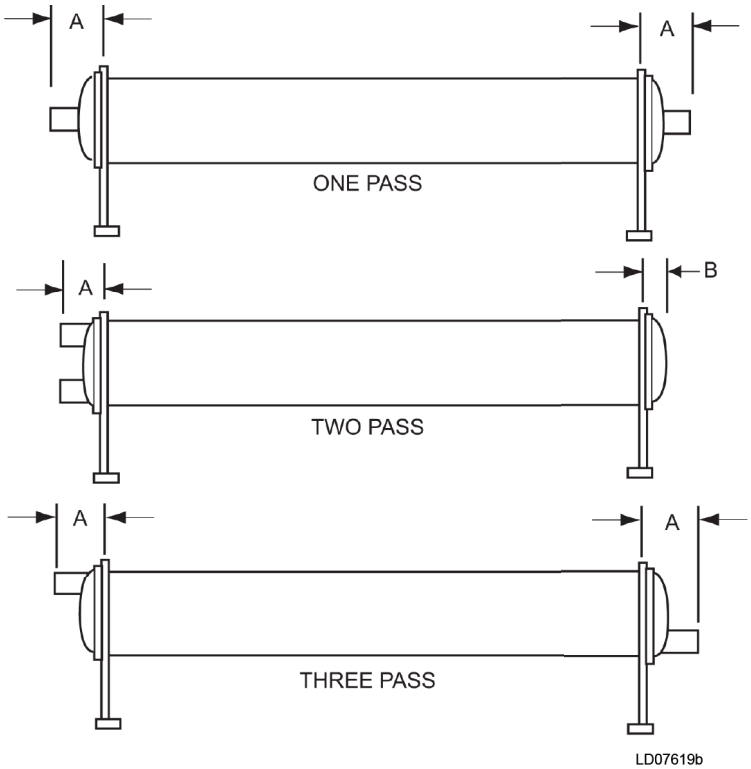


**Table 32: Condenser nozzle dimensions, ft-in. (mm) vs design working pressure, psig (mpa)**

| Cond. shell code | 1 Pass | | 2 Pass | | | | 3 Pass | |
|---|---|---|---|---|---|---|---|---|
| | A | | A | | B | | A | |
| | 150 (1.14) | 300 (2.17) | 150 (1.14) | 300 (2.17) | 150 (1.14) | 300 (2.17) | 150 (1.14) | 300 (2.17) |
| **B** | 1 ft 10 1/2 in. (573) | O | 1 ft 10 1/2 in. (573) | O | 1 ft 3 3/8 in. (391) | O | 1 ft 10 1/2 in. (573) | O |
| **C** | 1 ft 11 5/8 in. (602) | O | 1 ft 11 5/8 in. (602) | O | 1 ft 4 3/8 in. (416) | O | 1 ft 11 5/8 in. (602) | O |

ⓘ **Note:** O = Available for Special Quote.

# Condensers – marine waterboxes

## Figure 58: One pass

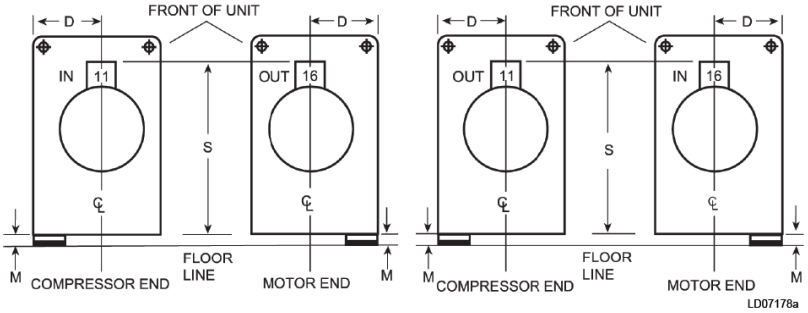


| For shells: B, C | |
|---|---|
| Condenser 1 pass | |
| In | Out |
| 11 | 16 |
| 16 | 11 |

## Figure 59: Two pass

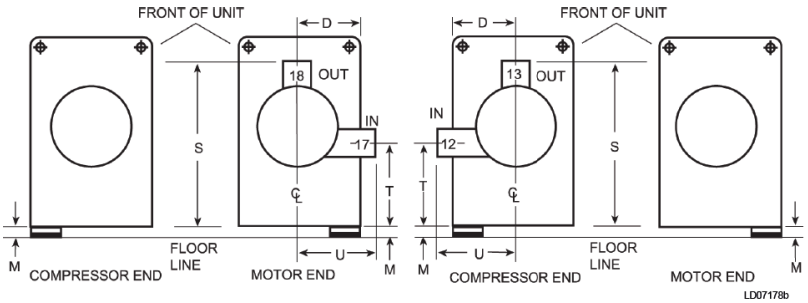


| For shells: B, C | |
|---|---|
| Condenser 2 pass | |
| In | Out |
| 17 | 18 |
| 12 | 13 |

## Figure 60: Three pass

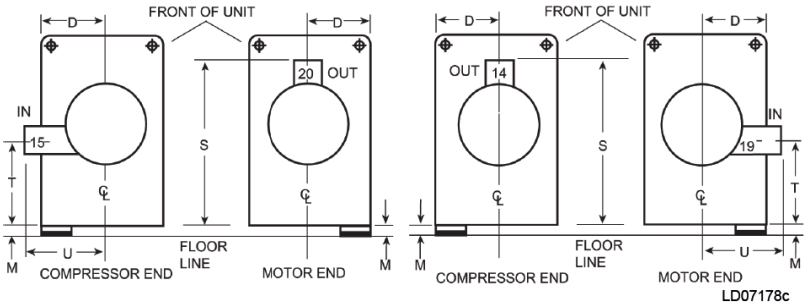


| For shells: B, C | |
|---|---|
| Condenser 3 pass | |
| In | Out |
| 15 | 20 |
| 19 | 14 |

**Table 33: Condenser - marine waterboxes end dimensions**

| Cond shell code | 1 pass | | | 2 pass | | | | | 3 pass | | | | |
|---|---|---|---|---|---|---|---|---|---|---|---|---|---|
| | Nozzle pipe size (in.) | Nozzle dimensions, ft-in. (mm) | | Nozzle pipe size (in) | Nozzle dimensions, ft-in. (mm) | | | | Nozzle pipe size (in) | Nozzle dimensions, ft-in. (mm) | | | |
| | | D | S | | D | S | T | U | | D | S | T | U |
| **B** | 24 in. | 2 ft 7 1/2 in. (802) | 7 ft 5 3/8 in. (2,271) | 18 in. | 2 ft 7 1/2 in. (802) | 7 ft 5 3/8 in. (2,271) | 3 ft 1 1/8 in. (943) | 2 ft 10 in. (864) | 16 in. | 2 ft 7 1/2 in. (802) | 7 ft 5 3/8 in. (2,271) | 3 ft 1 1/8 in. (943) | 2 ft 10 in. (864) |
| **C** | 24 in. | 2 ft 10 in. (864) | 7 ft 9 1/4 in. (2,369) | 20 in. | 2 ft 10 in. (864) | 7 ft 9 1/4 in. (2,369) | 3 ft 3 in. (991) | 2 ft 11 1/2 in. (903) | 16 in. | 2 ft 10 in. (864) | 7 ft 9 1/4 in. (2,369) | 3 ft 3 in. (991) | 2 ft 11 1/2 in. (903) |

**Note:**

1. All dimensions are approximate. Certified dimensions are available upon request.
2. Standard water nozzles are Schedule 40 pipe size, furnished as welding stub-outs with ANSI/AWWA C-606 grooves, allowing the option of welding, flanges, or use of ANSI/AWWA C-606 couplings. Factory-installed, class 150 (ANSI B16.5, round slip-on, forged carbon steel with 1/16 in. (2 mm) raised face), water flanged nozzles are optional (add 1/2 in. (13 mm) to nozzle length). Companion flanges, nuts, bolts, and gaskets are not furnished.
3. One-, two-, and three-pass nozzle arrangements are available only in pairs shown and for all shell codes. Any pair of evaporator nozzles may be used in combination with any pair of condenser nozzles. Compact waterboxes on one heat exchanger may be used with Marine Waterboxes on the other heat exchanger.
4. Condenser water must enter the waterbox through the bottom connection for proper operation of the sub-cooler to achieve rated performance.
5. Add dimension **M** from Table 22 for the appropriate isolator type.

**Figure 61: Condensers - marine waterboxes side dimensions**

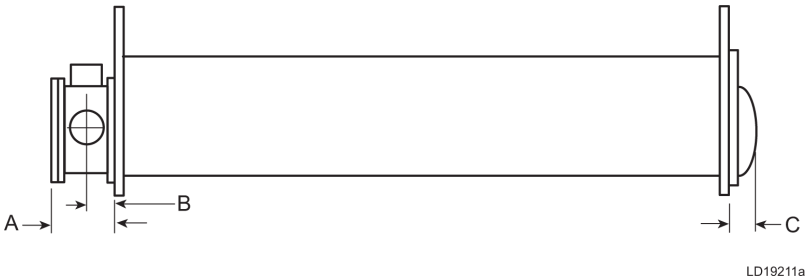


**Table 34: Evaporator nozzle dimensions (1 and 2 pass), ft-in. (mm) vs design working pressure, psig (mpa)**

| Evap shell code | 1 pass | | | | 2 pass | | | | | |
|---|---|---|---|---|---|---|---|---|---|---|
| | A | | B | | A | | B | | C | |
| | 150 (1.14) | 300 (2.17) | 150 (1.14) | 300 (2.17) | 150 (1.14) | 300 (2.17) | 150 (1.14) | 300 (2.17) | 150 (1.14) | 300 (2.17) |
| B | 2 ft 11 3/4 in. (909) | O | 1 ft 4 1/2 in. (419) | O | 2 ft 5 3/4 in. (756) | O | 1 ft 1 1/2 in. (344) | O | 1 ft 3 3/8 in. (391) | O |
| C | 3 ft (915) | O | 1 ft 4 1/2 in. (419) | O | 2 ft 8 in. (813) | O | 1 ft 2 1/2 in. (368) | O | 1 ft 3 3/8 in. (391) | O |

**Table 35: Evaporator nozzle dimensions (3 pass), ft-in. (mm) vs design working pressure, psig (mpa)**

| Evap shell code | 3 pass | | | |
|---|---|---|---|---|
| | A | | B | |
| | 150 (1.14) | 300 (2.17) | 150 (1.14) | 300 (2.17) |
| B | 2 ft 5 3/4 in. (756) | O | 1 ft 1 1/2 in. (344) | O |
| C | 2 ft 8 in. (813) | O | 1 ft 2 1/2 in. (368) | O |

**Note:**

1. O = Available for Special Quote.
2. All dimensions are approximate. Certified dimensions are available upon request.
3. Standard water nozzles are Schedule 40 pipe size, furnished as welding stub-outs with ANSI/AWWA C-606 grooves, allowing the option of welding, flanges, or use of ANSI/AWWA C-606 couplings. Factory-installed, class 150 (ANSI B16.5, round slip-on, forged carbon steel with 1/16 in. (2 mm) raised face), water flanged nozzles are optional (add 1/2 in. (13 mm) to nozzle length). Companion flanges, nuts, bolts, and gaskets are not furnished.
4. One-, two-, and three-pass nozzle arrangements are available only in pairs shown and for all shell codes. Any pair of evaporator nozzles may be used in combination with any pair of condenser nozzles. Compact waterboxes on one heat exchanger may be used with Marine Waterboxes on the other heat exchanger.
5. Condenser water must enter the waterbox through the bottom connection for proper operation of the sub-cooler to achieve rated performance.

# Isolators

## B-B shells (spring isolators)

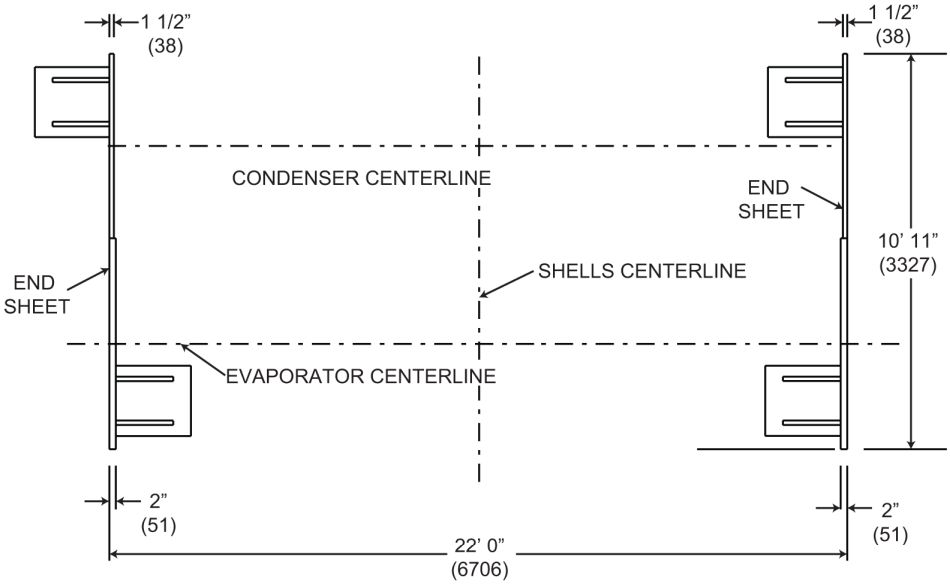


FLOOR LAYOUT (NOT TO SCALE)
DIMENSIONS ARE TYPICAL ALL FOUR CORNERS

ISOLATOR DETAILS

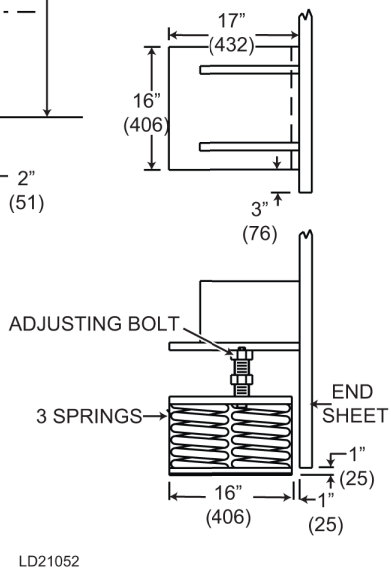


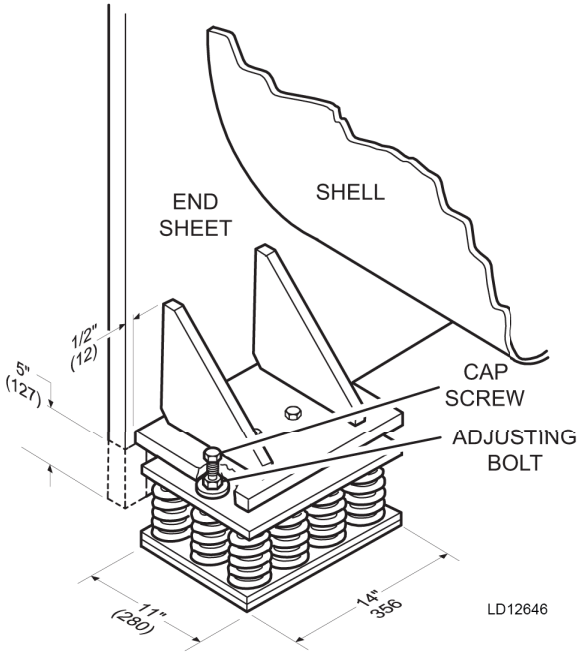


12-SPRING ISOLATORS

ⓘ **Note:** All dimensions are in ft-in. (mm).

## B-B shells (neoprene pad isolators)

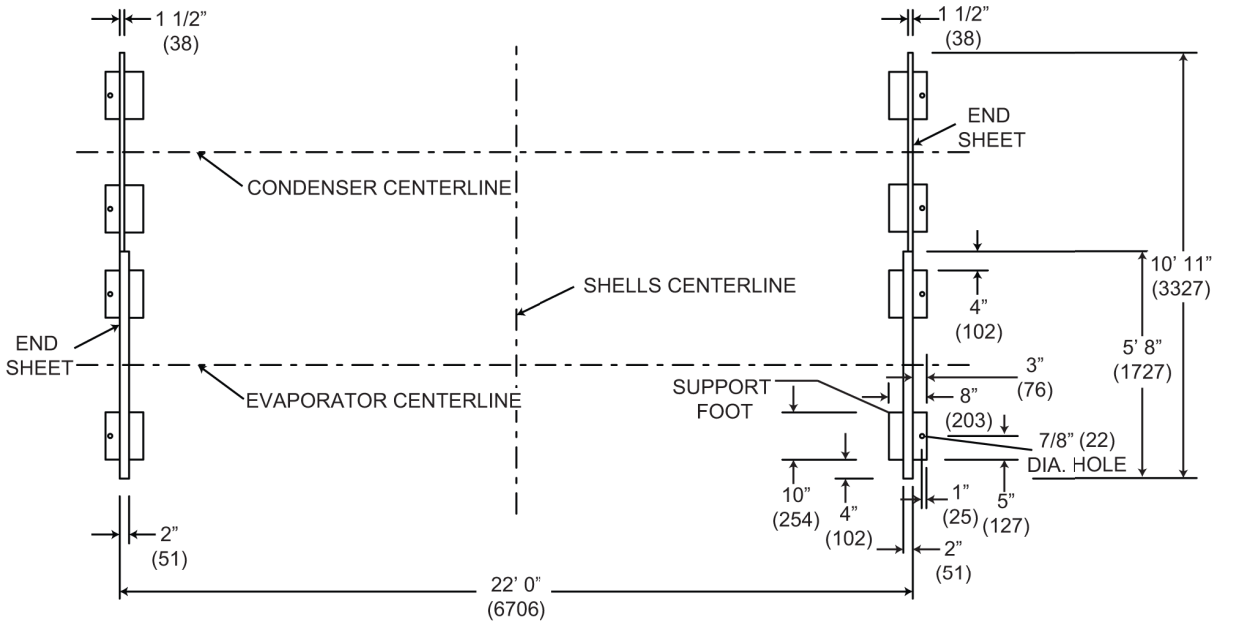


FLOOR LAYOUT (NOT TO SCALE)
DIMENSIONS ARE TYPICAL ALL EIGHT PADS

ISOLATOR DETAILS

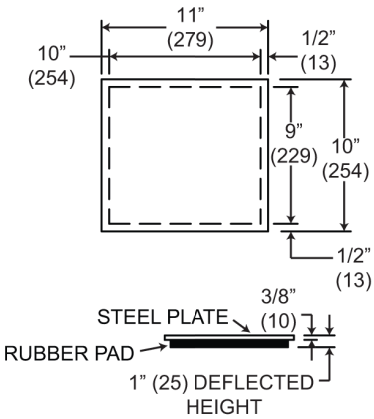


ISOLATOR TO BE CENTERED
UNDER SUPPORT FOOT

LD19235

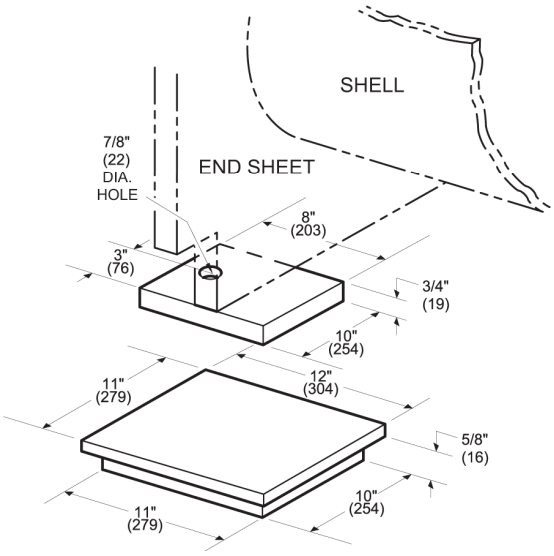


LD12642

ⓘ **Note:** All dimensions are in ft-in. (mm).

# B-C shells (spring isolators)

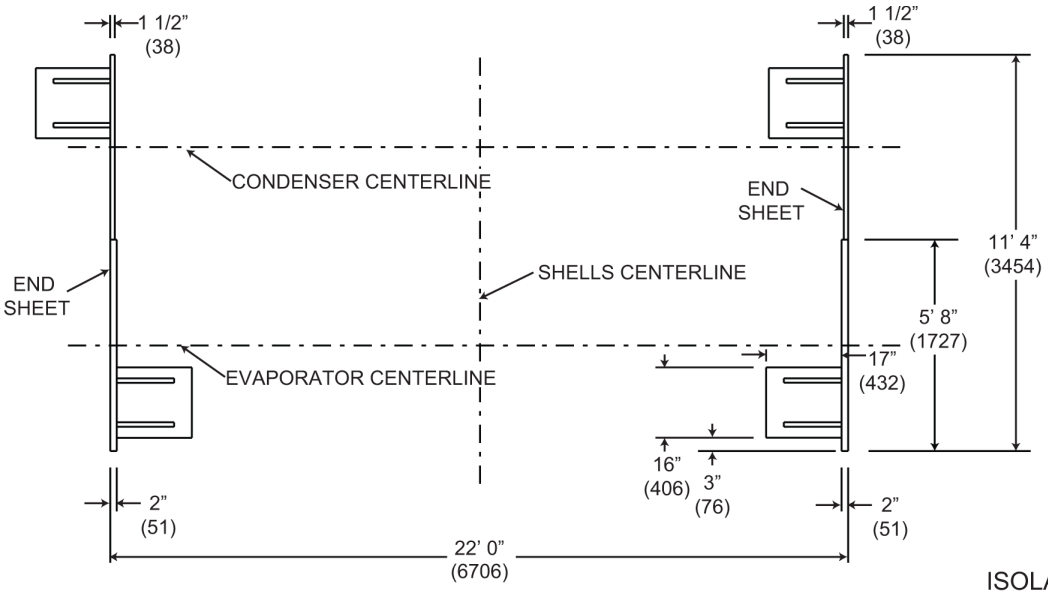


FLOOR LAYOUT (NOT TO SCALE)
DIMENSIONS ARE TYPICAL ALL FOUR CORNERS

ISOLATOR DETAILS

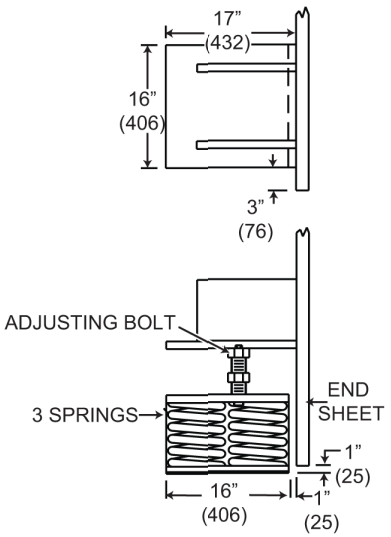


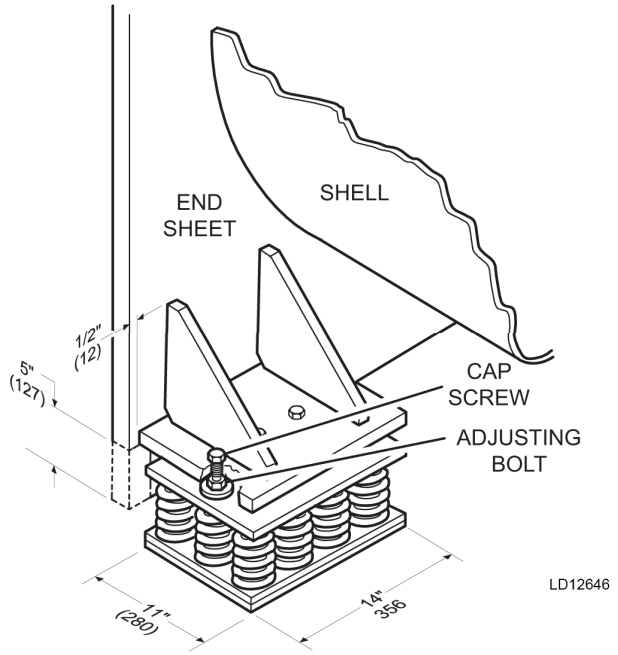


12-SPRING ISOLATORS

ⓘ **Note:** All dimensions are in ft-in. (mm).

## B-C shells (neoprene pad isolators)

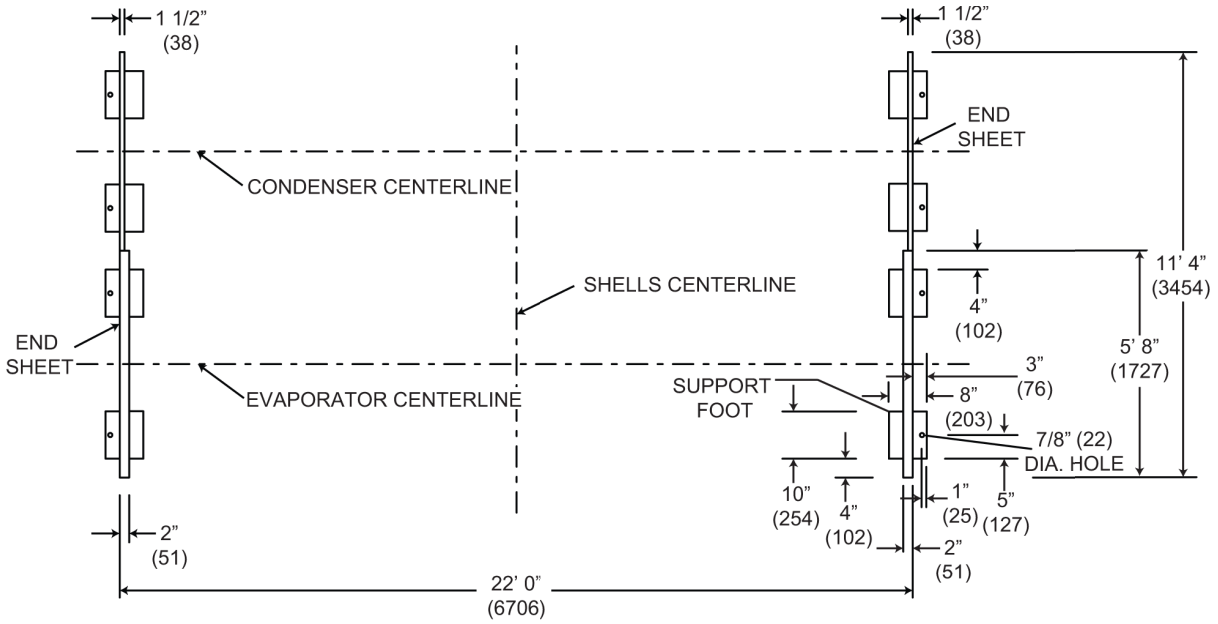


FLOOR LAYOUT (NOT TO SCALE)
DIMENSIONS ARE TYPICAL ALL EIGHT PADS

ISOLATOR DETAILS

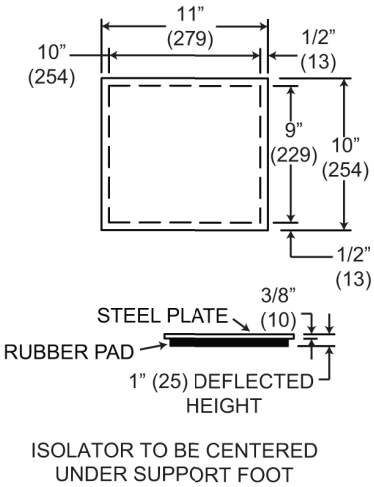


ISOLATOR TO BE CENTERED
UNDER SUPPORT FOOT

LD29660

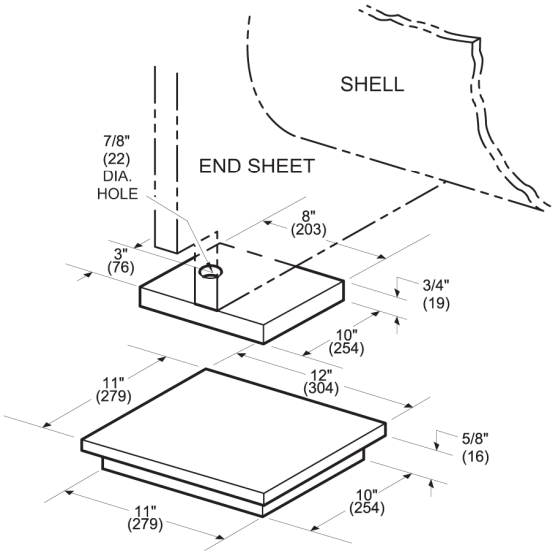


LD12642

ⓘ **Note:** All dimensions are in ft-in. (mm).

# C-B shells (spring isolators)

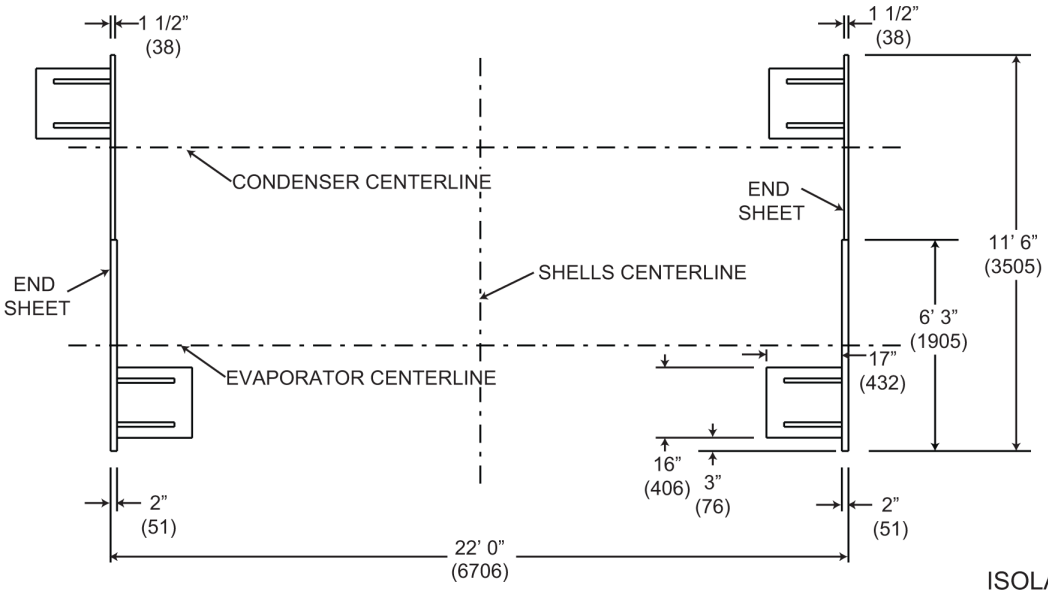


FLOOR LAYOUT (NOT TO SCALE)
DIMENSIONS ARE TYPICAL ALL FOUR CORNERS

ISOLATOR DETAILS

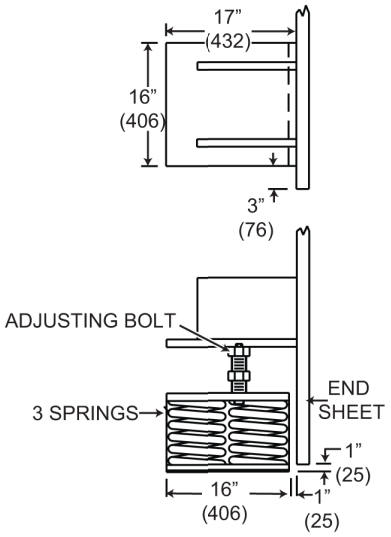


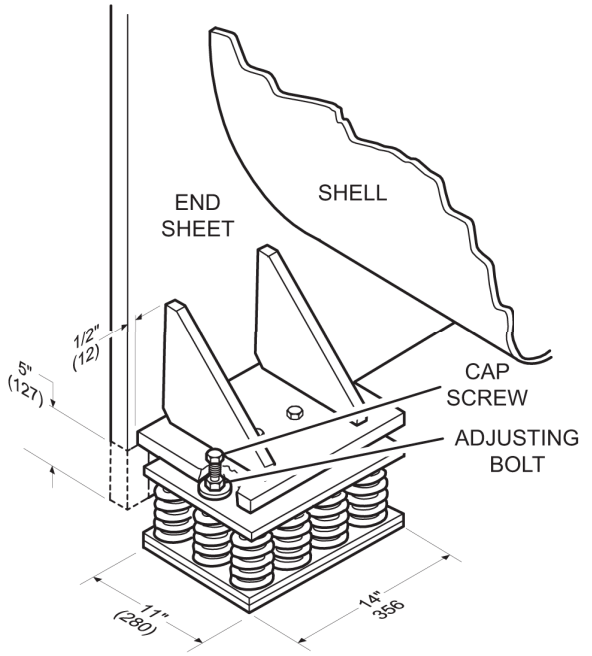


12-SPRING ISOLATORS

ⓘ **Note:** All dimensions are in ft-in. (mm).

# C-B shells (neoprene pad isolators)

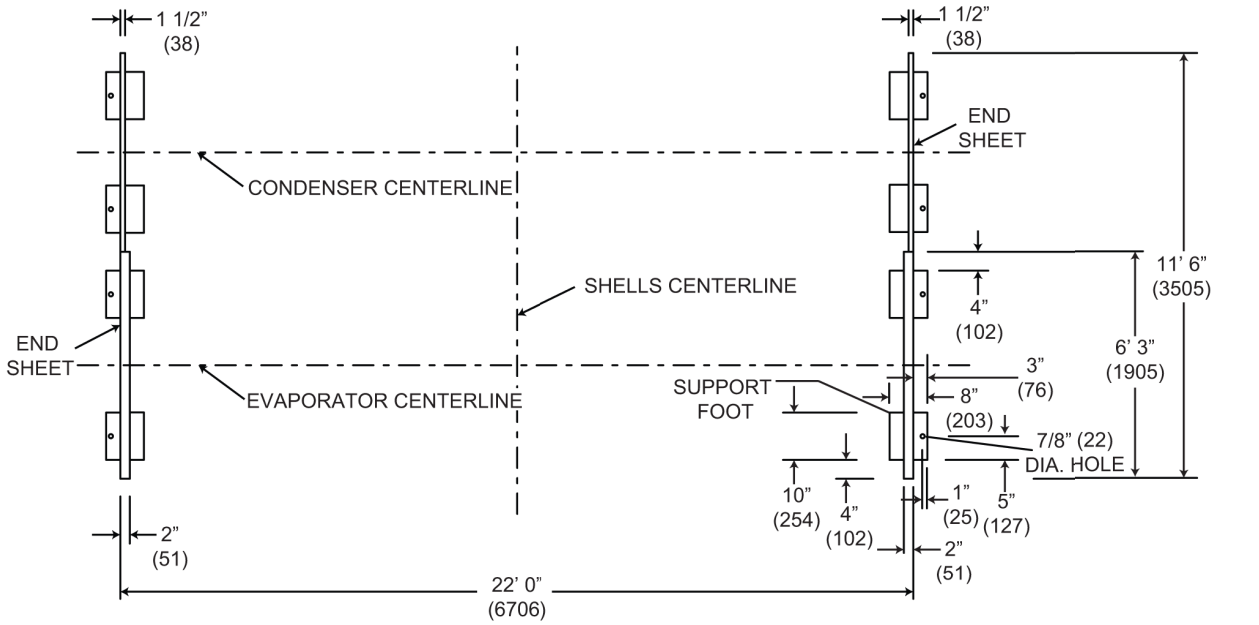


FLOOR LAYOUT (NOT TO SCALE)
DIMENSIONS ARE TYPICAL ALL EIGHT PADS

ISOLATOR DETAILS

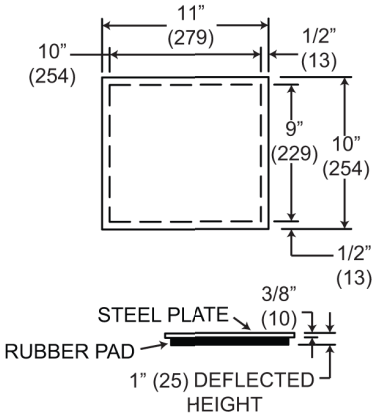


ISOLATOR TO BE CENTERED
UNDER SUPPORT FOOT

LD29661

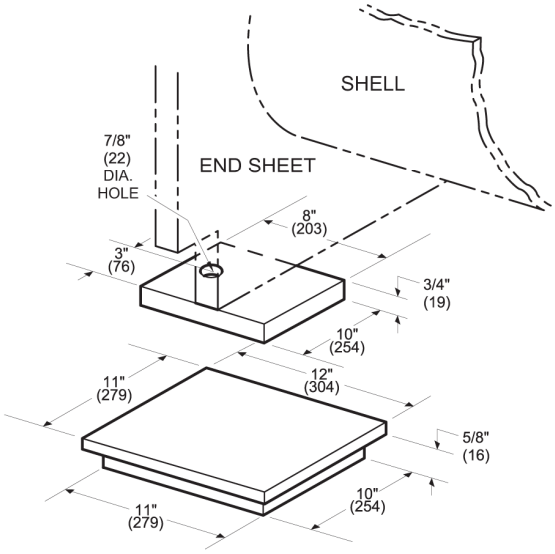


LD12642

ⓘ **Note:** All dimensions are in ft-in. (mm).

# C-C shells (spring isolators)

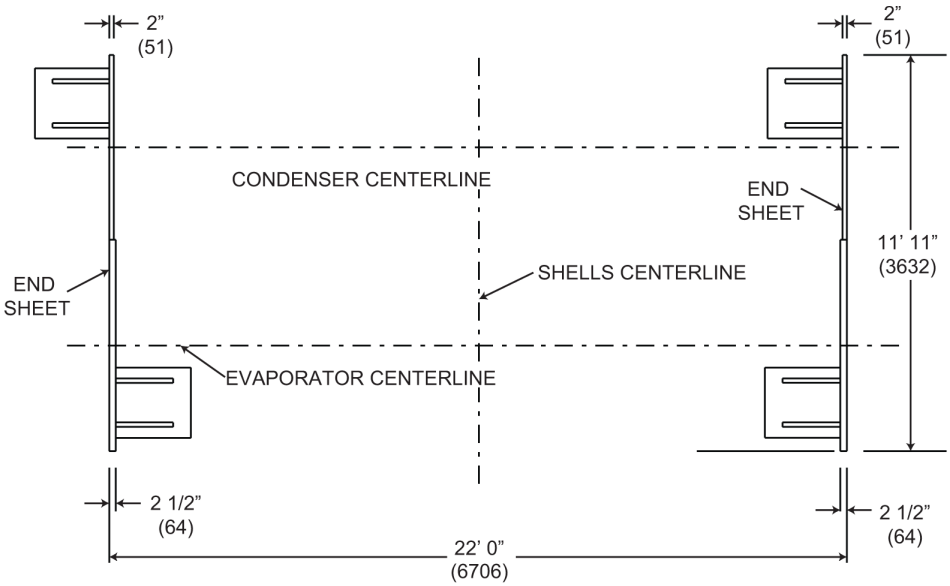


FLOOR LAYOUT (NOT TO SCALE)
DIMENSIONS ARE TYPICAL ALL FOUR CORNERS

ISOLATOR DETAILS

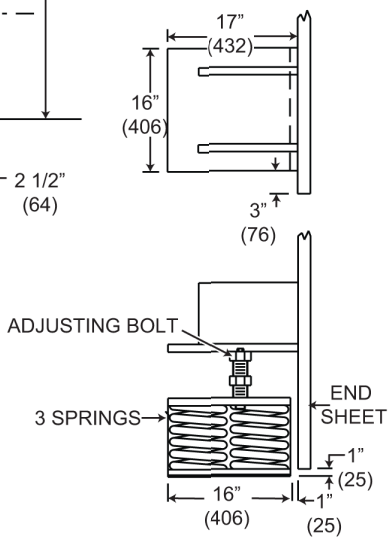


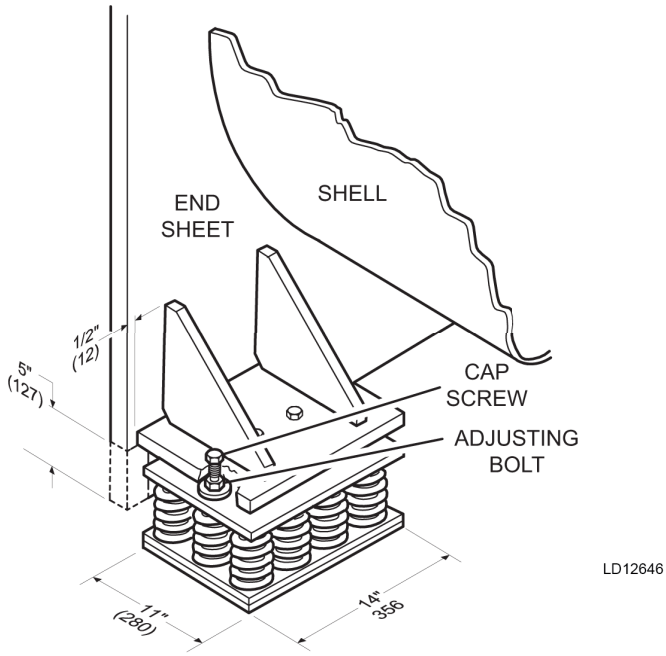


12-SPRING ISOLATORS

ⓘ **Note:** All dimensions are in ft-in. (mm).

# C-C shells (neoprene pad isolators)

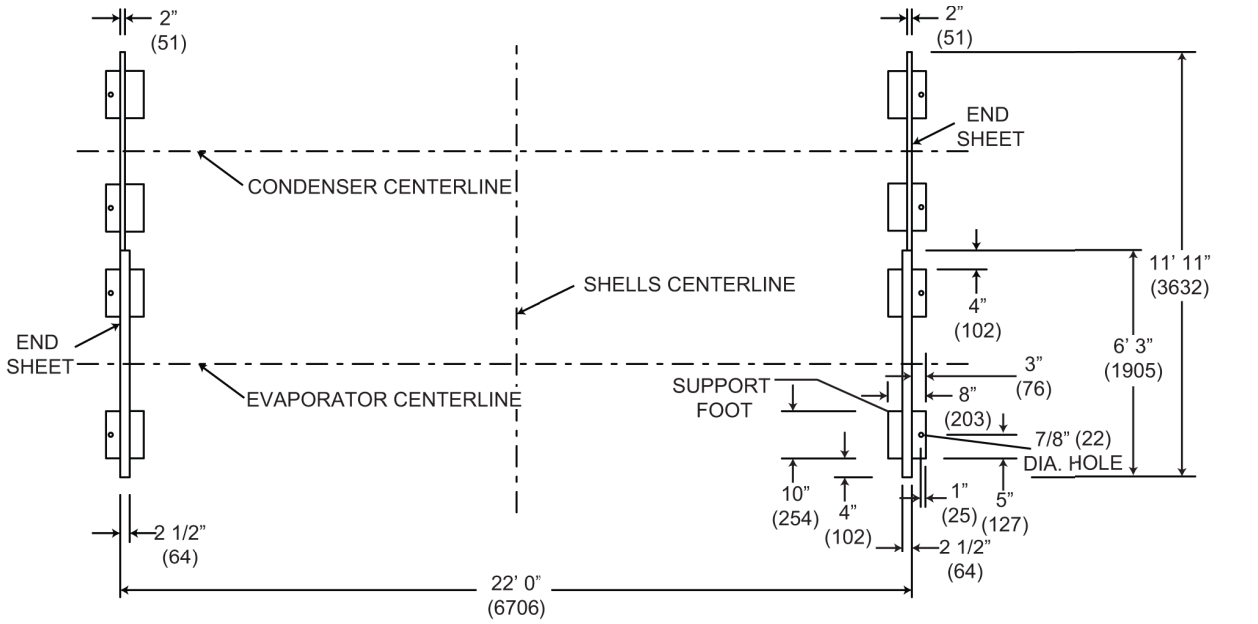


FLOOR LAYOUT (NOT TO SCALE)
DIMENSIONS ARE TYPICAL ALL EIGHT PADS

ISOLATOR DETAILS

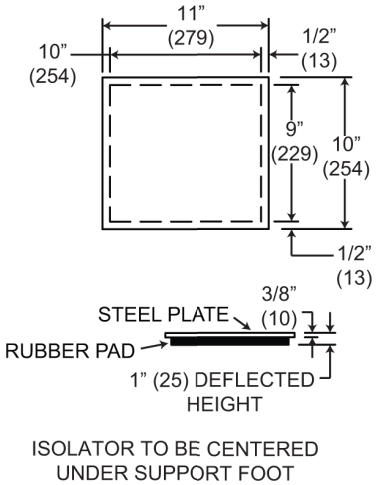


ISOLATOR TO BE CENTERED
UNDER SUPPORT FOOT

LD19235b

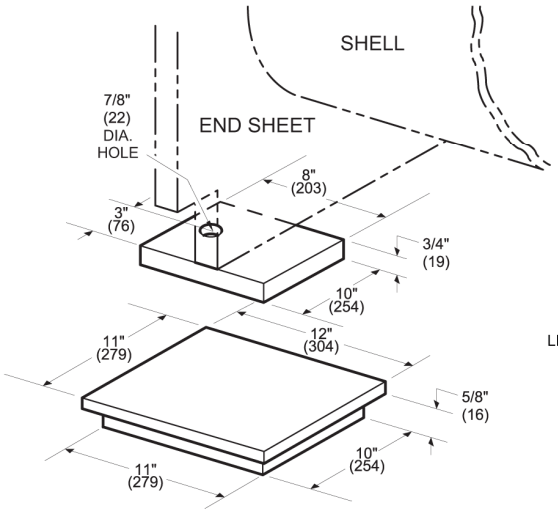


LD12642

ⓘ **Note:** All dimensions are in ft-in. (mm).

# Weights

**Table 36: Approximate unit weight including motor only (without waterbox)***

| Shells | Shipping weight, lb (kg) | Operating weight, lb (kg) | Shells | Shipping weight, lb (kg) | Operating weight, lb (kg) |
|---|---|---|---|---|---|
| **B-B** | 86,379 (39,181) | 102,681 (46,575) | **C-B** | 93,358 (42,346) | 111,080 (50,385) |
| **B-C** | 88,426 (40,109) | 106,089 (48,121) | **C-C** | 95,405 (43,275) | 114,487 (51,930) |

**Note:**

This table does not include UM starter weights, presented in the performance page for each selection.

* For total unit weight, add an additional twice required evaporator waterbox weight plus twice condenser waterbox weight.

** Unit specific weight can be found in performance reports for standard equipment configurations.

The evaporator waterbox weights in the following table are to be added to standard unit weights shown in Table 36.

**Table 37: Evaporator waterbox weights**

| Shells | Shipping weight add - lbs (kg) | | | Operating weight add - lbs (kg) | | |
|---|---|---|---|---|---|---|
| | **1 Pass** | **2 Pass** | **3 Pass** | **1 Pass** | **2 Pass** | **3 Pass** |
| **B_-__ (compact)** | 563 (256) | 1,253 (569) | 652 (296) | 2,742 (1,244) | 3,432 (1,557) | 2,831 (1,285) |
| **C_-__ (compact)** | 667 (303) | 1,468 (666) | 774 (352) | 4,199 (1,905) | 5,000 (2,268) | 4,306 (1,954) |
| **B_-__ (marine)**** | 3,011 (1,366) | 3,700 (1,679) | 3,134 (1,422) | 8,348 (3,787) | 7,135 (3,237) | 8,028 (3,642) |
| **C_-__ (marine)**** | 4,227 (1,918) | 5,087 (2,308) | 4,390 (1,992) | 12,178 (5,524) | 9,839 (4,463) | 11,772 (5,340) |

**Note:**

* Waterbox weights are for each (one) side of the shell

** Marine waterbox weight includes weight of the cover plate

The condenser waterbox weights in the following table are to be added to standard unit weights shown in Table 36.

**Table 38: Condenser waterbox weights**

| Shells | Shipping weight add - lbs (kg) | | | Operating weight add - lbs (kg) | | |
|---|---|---|---|---|---|---|
| | **1-Pass** | **2-Pass** | **3-Pass** | **1-Pass** | **2-Pass** | **3-Pass** |
| **__-B_ (compact)** | 426 (194) | 913 (415) | 467 (212) | 1,642 (745) | 2,129 (966) | 1,683 (764) |
| **__-C_ (compact)** | 644 (293) | 1,370 (622) | 708 (322) | 2,406 (1,092) | 3,132 (1,421) | 2,470 (1,121) |
| **__-B_ (marine)**** | 3,024 (1,372) | 3,478 (1,578) | 3,069 (1,393) | 8,305 (3,768) | 6,141 (2,786) | 7,300 (3,312) |
| **__-C_ (marine)**** | 3,527 (1,600) | 4,251 (1,929) | 3,620 (1,643) | 11,022 (5,000) | 8,436 (3,827) | 10,133 (4,597) |

**Note:**

* Waterbox weights are for each (one) side of the shell

** Marine waterbox weight includes weight of the cover plate

# Guide specifications

Furnish and install where indicated on the drawings___ YORK YK-EP Centrifugal Liquid Chilling Unit(s). Each unit shall produce a capacity ___ of tons, cooling ___ GPM of __ from ___ °F to ___ °F when supplied with ___ GPM of condenser water at ___ °F. Power input shall not exceed ___ kW with an IPLV (NPLV) of ___ . The evaporator shall be selected for__ fouling factor and a maximum liquid pressure drop of ___ ft. Water side shall be designed for 150 psig working pressure. The condenser shall be selected for ___ fouling factor and maximum liquid pressure drop of ___ ft. Waterside shall be designed for 150 psig working pressure. Power shall be supplied to the primary compressor motor at ___ volts – 3-phase – (60) Hertz and to the economizer compressor motor solid-state-starter at ___ volts – 3-phase – (60) Hertz. Power also shall be supplied to the Control Panel – For remote starters or medium voltage variable speed drive a 115 volt, single phase, 60 Hertz 2 kVa power supply must be furnished at the starter. For chillers with unit mounted united mounted solid-state-starter, the variable speed oil pump power panel will not require an additional control power transformer, but will be included in the YORK furnished Primary starter. For chillers without a unit-mounted primary starter, a 3-phase supply will be required for the auxiliary power (heater and oil pump). The economizer compressor auxiliary power is always sourced from the economizer starter which is unit-mounted.

or

Furnish and install where indicated on the drawings __ YORK YK-EP Centrifugal Liquid Chilling Unit(s). Each unit shall produce a capacity of ___ kW, cooling ___ l/s of ___ from ___ °C to ___ °C when supplied with ___ l/s of condenser water at ___°C. Power input shall not exceed ___ kW with an IPLV (NPLV) of ___. The evaporator shall be selected for ___$m^2$ C/W fouling factor and maximum liquid pressure drop of ___kPa. Waterside shall be designed for 10.3 barg working pressure. The condenser shall be selected for ___ fouling factor and maximum liquid pressure drop of ___ kPa. Waterside shall be designed for 10.3 barg working pressure. Power shall be supplied to the primary compressor motor at ___ volts – 3-phase – (50) Hertz and to the economizer compressor motor solid-state-starter at ___ volts – 3-phase – (50) Hertz. Power also shall be supplied to the Control Panel – For remote starters or medium voltage variable speed drive a 115 volt, single phase, 50 Hertz 2 kVa power supply must be furnished at the starter. For chillers with unit mounted united mounted solid-state-starter, the variable speed oil pump power panel will not require an additional control power transformer, but will be included in the YORK furnished Primary starter. For chillers without a unit-mounted primary starter, a 3-phase supply will be required for the auxiliary power (heater and oil pump). The economizer compressor auxiliary power is always sourced from the economizer starter which is unit-mounted.

## Compressors

Two centrifugal compressors shall be provided, operating partially in parallel and discharging to a common condenser on the chiller. Check valves will be supplied on the discharge economizer compressor to control refrigerant flow during single compressor operation.

Each compressor shall be a single-stage centrifugal type, powered by an open-drive electric motor. The housing shall be fully accessible with vertical circular joints, with the complete operating assembly removable from the compressor and scroll housing. Castings on both the primary and economizer compressors shall be designed for a minimum 235 psig (16.2 barg) working pressure and hydrostatically pressure tested at a minimum of 352 psig (24.3 barg). The rotor assembly shall consist of a heat-treated alloy steel drive shaft and impeller shaft with a cast aluminum, fully shrouded impeller. The impeller shall be designed for balanced thrust, dynamically balanced and overspeed tested for smooth, vibration-free operation. Insert-type journal and thrust bearings shall be fabricated of aluminum alloy, precision bored and axially grooved.

Internal single helical gears with crowned teeth shall be designed so that more than one tooth is in contact at all times to provide even load distribution and quiet operation. Each gear shall be individually mounted in its own journal and thrust bearings to isolate it from impeller and motor

forces. Shaft seals shall be provided and are of the double bellows, double-seal, cartridge type. A gravity-fed oil reservoir shall be built into the top of the compressor to provide lubrication during coast-down in the event of a power failure.

**Fixed Speed Drive** - Capacity control shall be achieved by use of pre-rotation vanes to provide fully modulating control from full load to minimum load.

**Variable Speed Drive** - Capacity control shall be accomplished by the Adaptive Capacity Control (ACC), providing an optimal relationship between compressor speed and inlet pre-rotation vane position for maximum energy efficiency. Control shall automatically compensate for adverse operating conditions, such as fouled tubes, and adjust to prior operation after correction of these conditions.

The unit shall be capable of continuous, reliable operation with low ECWT at all load conditions as outlined on the equipment schedule. An external electric actuator shall automatically control pre-rotation vane position.

## Lubrication system

Lubrication oil shall be force-fed to all compressor bearings, gears, and rotating surfaces by external variable speed oil pumps. The oil pumps shall vary oil flow to the compressor based on operating and stand-by conditions, ensuring adequate lubrication at all times. The oil pumps shall operate prior to start-up, during compressor operation and during coastdown. Compressors shall each have an auxiliary reservoir to provide lubrication during coastdown in the event of a power failure.

An oil reservoir, separate from the compressor, shall contain the two submersible 2 HP oil pumps and a oil heaters, thermostatically controlled to remove refrigerant from the oil. The oil reservoir shall be listed as part of the chiller by a nationally recognized testing laboratory and shall be factory air strength tested at 1.1 times design working pressure.

Oil shall be filtered by an externally mounted 1/2 micron replaceable cartridge oil filter equipped with service valves. Oil cooling shall be done via a refrigerant cooled oil cooler, with all piping factory-installed. Oil side of the oil cooler shall be provided with service valves.

An automatic oil return system to recover any oil that may have migrated to the evaporator shall be provided. Oil piping shall be completely factory-installed and tested.

## Motor driveline

Each compressor motor shall be an open drip-proof, squirrel cage, induction type operating at 3570 rpm for 60 Hz operation and 2975 rpm for 50 Hz operation.

Each open motor shall be provided with a D-flange, bolted to a cast iron adaptor mounted on the compressor to allow the motor to be rigidly coupled to the compressor. This ensures factory alignment of motor and compressor shafts.

Each motor drive shaft shall be directly connected to its compressor shaft with a flexible disc coupling. The coupling shall have all metal construction with no wearing parts to assure long life, and no lubrication requirements to provide low maintenance. A large steel terminal box with gasketed front access cover shall be provided for field-connected conduit.

## Evaporator

Evaporator shall be of the shell-and-tube, flooded type designed for a minimum of 180 psig (12.4 barg) working pressure on the refrigerant side. Shell shall be fabricated from rolled carbon steel plates with fusion welded seams, carbon steel tube sheets, drilled and reamed to accommodate the tubes, and intermediate tube supports spaced no more than four feet apart. The refrigerant side of each shell is designed, tested and stamped in accordance with ASME Boiler and Pressure Vessel Code, Section VIII – Division I, or other pressure vessel code as appropriate.

Heat exchanger tubes shall be of the high-efficiency, externally and internally enhanced type. Tubes shall use the “skip-fin” design, providing a smooth internal and external surface at each intermediate tube support. This provides extra wall thickness and non-work hardened copper at the support location, extending the life of the heat exchangers. If skip-fin tubes are not used, minimum tube wall thickness shall be 0.035 in. (0.889 mm). Each tube shall be roller expanded into the tube sheets providing a leak-proof seal, and be individually replaceable. Water velocity through the tubes shall not exceed 12 ft./sec. (3.7 m/sec). A liquid level sight glass shall be provided on the side of the shell to aid in determining proper refrigerant charge and to check the condition of the refrigerant charge. Aluminum mesh eliminators shall be located above the tube bundle to prevent liquid refrigerant carryover to the compressor. The evaporator shall have a refrigerant relief device sized to meet the requirements of the ASHRAE 15 Safety Code for Mechanical Refrigeration.

Waterboxes shall be removable to permit tube cleaning and replacement. Stub-out water connections having ANSI/AWWA C-606 grooves shall be provided. Waterboxes shall be designed for 150 psig (10.3 barg) design working pressure and be tested at 225 psig (15.5 barg). Vent and drain connections with plugs shall be provided on each waterbox, except for marine waterboxes with vertical nozzles where there are drain connections only. Low flow protection shall be provided by a thermal-type flow sensor, factory mounted in the water nozzle connection and wired to the chiller panel.

## Condenser

Condenser shall be of the shell-and-tube type, designed for a minimum of 235 psig (16.2 barg) working pressure on the refrigerant side. Shell shall be fabricated from rolled carbon steel plates with fusion welded seams. Carbon steel tube sheets, drilled and reamed to accommodate the tubes, are welded to the end of each shell. Intermediate tube supports are drilled and reamed to eliminate sharp edges, fabricated from carbon steel plates. The refrigerant side of each shell is designed, tested and stamped in accordance with ASME Boiler and Pressure Vessel Code, Section VIII – Division I, or other pressure vessel code as appropriate.

Heat exchanger tubes shall be high efficiency, externally and internally enhanced type. Tubes shall utilize the “skip-fin” design, providing a smooth internal and external surface at each intermediate tube support.

This skip-fin design provides extra wall thickness and non-work hardened copper at the support location, extending the life of the heat exchangers. If skip-fin tubes are not used, the minimum tube wall thickness shall be 0.035 in. (~1 mm). Each tube shall be roller expanded into the tube sheets providing a leak-proof seal, and be individually replaceable. Water velocity through the tubes shall not exceed 12 ft./sec (3.7 m/sec). A liquid level sight glass shall be provided on the side of the shell to aid in determining proper refrigerant charge and to check condition of the refrigerant charge. The condenser shall have dual refrigerant relief devices; each sized to meet the requirements of the ASHRAE 15 Safety Code for Mechanical Refrigeration. Arrangement shall allow either valve to be isolated and replaced without removing the unit refrigerant charge.

The condenser shall be provided with positive shutoff valves in the compressor discharge line to the condenser and in the liquid line leaving the condenser. This will allow pumpdown and storage of the refrigerant charge in the condenser. Due to the possibility of not seating properly, check valves are not acceptable for isolation purposes. If a check valve is used, a positive shutoff valve must be provided in series with the check valve.

Waterboxes shall be removable to permit tube cleaning and replacement. Stubout water connections having ANSI/AWWA C-606 grooves shall be provided. Waterboxes shall be designed for 150 psig (10.3 barg) design working pressure and be tested at 225 psig (15.5 barg). Vent and drain connections with plugs shall be provided on each waterbox, except for marine waterboxes with vertical nozzles where there are drain connections only.

## Refrigerant flow control

Refrigerant flow shall be controlled by a variable orifice. The variable orifice controls shall automatically adjust to maintain proper refrigerant level in the condenser, economizer, and evaporator. This shall be controlled by monitoring refrigerant level in the condenser and economizer, assuring optimal subcooler and economizer performance.

## Flash economizer (intercooler)

A single stage, horizontal type, flash economizer (intercooler) shall be provided with internally mounted baffles, liquid spray pipe, an externally mounted level transmitter and an external control valve.

## Control center

**General** – The chiller shall be controlled by a single microprocessor based control center. The chiller control panel shall provide control of chiller operation and monitoring of chiller sensors, actuators, relays and switches. The chiller panel shall provide capacity control operation of the compressors, and shall provide cycling of primary compressor in response to load requirements.

**Control Panel** – The control panel shall include a 10.4 in. diagonal color liquid crystal display (LCD) surrounded by "soft" keys which are redefined based on the screen displayed at that time. This shall be mounted in the middle of a keypad interface and installed in a locked enclosure. The screen shall detail all operations and parameters, using a graphical representation of the chiller and its major components. Panel verbiage shall be available in other languages as an option, with English always available. Data shall be displayed in either English or Metric units. Smart Freeze Point Protection shall run the chiller at 36°F (2.2°C) leaving chilled water temperature, and not have nuisance trips on low water temperature. The sophisticated program and sensor shall monitor the chiller water temperature to prevent freeze up. The panel shall display countdown timer messages so the operator knows when functions are starting and stopping. Every programmable point shall have a pop up screen with the allowable ranges, so that the chiller cannot be programmed to operate outside of its design limits.

The chiller control panel shall also provide:

1. System operating information including:
   - Entering and leaving chilled water temperature
   - Entering and leaving condenser water temperature
   - Evaporator and condenser saturation temperature
   - Differential oil pressure (both compressors)
   - Percent motor current (both motors)
   - Compressor discharge temperature (both compressors)
   - Oil reservoir temperature
   - Compressor thrust bearing positioning (primary compressors)
   - Chiller operating hours, and operating hours
   - Number of unit starts, and number of starts each compressor
2. Local programming of setpoints through the universal keypad including:
   - Leaving chilled water temperature
   - Percent current limit
   - Pull down demand limiting
   - Six week schedule for starting and stopping the chiller, pumps and tower
   - Remote reset temperature range

3. Status messages indicating:
   - System ready to start
   - System running
   - System coast down
   - System safety shutdown – manual restart
   - System cycling shutdown – auto restart
   - System prelube
   - Start inhibit
4. The text displayed within the system status and system details field shall be displayed as color coded message to indicate severity: red for safety fault, orange for cycling faults, yellow for warnings, and green for normal messages.
5. Safety shutdowns enunciated through the display and the status bar, and consist of system status, system details, day, time, cause of shutdown, and type of restart required. Safety shutdowns shall include:
   - Evaporator – low pressure
   - Evaporator – transducer or leaving liquid probe
   - Evaporator – transducer or temperature sensor
   - Discharge – high pressure contacts open (each compressor)
   - Condenser – high pressure
   - Condenser – pressure transducer out of range
   - Auxiliary safety – contacts closed
   - Discharge – high temperature (each compressor)
   - Discharge – low temperature (each compressor)
   - Oil – high temperature
   - Oil – low differential pressure (each compressor)
   - Oil – high differential pressure (each compressor)
   - Oil – sump pressure transducer out of range
   - Oil – differential pressure calibration (each compressor)
   - Oil – variable speed pump – pressure setpoint not achieved (two)
   - Thrust bearing – proximity probe clearance (primary compressor)
   - Thrust bearing – proximity probe out of range (primary compressor)
   - Thrust bearing – proximity probe uncalibrated (primary compressor)
   - Watchdog – software reboot
   - Surge detection – excess surge
6. Cycling shutdowns enunciated through the display and the status bar, and consists of system status, system details, day, time, cause of shutdown, and type of restart required. Cycling shutdowns shall include:
   - Multi unit cycling – contacts open
   - System cycling – contacts open
   - Oil – low temperature differential
   - Oil – low temperature
   - Control panel – power failure
   - Leaving chilled liquid – low temperature
   - Leaving chilled liquid – flow switch open
   - Motor controller – contacts open (each motor)

- Motor controller – loss of current (each motor)
- Power fault for each motor
- Control panel – schedule
- Proximity probe – low supply voltage (Primary compressor)
- Oil – variable speed pump – drive contacts open (each pump)

7. Security access to prevent unauthorized change of setpoints, to allow local or remote control of the chiller, and to allow manual operation of the pre rotation vanes and oil pump. Access shall be through ID and password recognition, which is defined by three different levels of user competence: view, operator, and service.
8. Trending data with the ability to customize points of once every second to once every hour. The panel shall trend up to 6 different parameters from a list of over 140, without the need of an external monitoring system.
9. The operating program is stored in non volatile memory (Flash) to eliminate reprogramming the chiller due to AC power failure. Programmed setpoints shall be retained in lithium battery backed RTC memory for a minimum of 11 years with power removed from the system.
10. A fused connection through a transformer mounted on the variable speed oil pump panel shall provide individual overcurrent protected power for all controls.
11. A numbered terminal strip for all required field interlock wiring.
12. An RS-232 port to output current Status Report, History Reports, and Data Logging and a record of the last 10 cycling or safety shutdowns to a field supplied printer. Data logs to a printer or a computer at a set programmable interval. This data can be preprogrammed to print from 1 minute to 1 day.
13. The capability to interface with a building automation system to provide:
    - Remote chiller start and stop
    - Remote leaving chiller liquid temperature adjust
    - Remote current limit setpoint adjust
    - Remote ready to start contacts
    - Safety shutdown contacts
    - Cycling shutdown contacts
    - Run contacts

## High and medium voltage VSD starter (option for primary compressor)

The Variable Speed Drive will be remote floor mounted. It will vary the compressor motor speed by controlling the frequency and voltage of the electrical power to the motor. The capacity control logic shall automatically adjust motor speed and compressor pre-rotation vane position independently for maximum part-load efficiency by analyzing information fed to it by sensors located throughout the chiller.

### Definitions

For the purpose of this Specification, the following definitions apply:

- **VSD** - Variable speed drive is a device that is used to vary the speed of a previously fixed speed motor.
- **NPC** - Neutral Point Clamp is a VSD topology that has the advantage of reducing the high line to neutral voltage that can occur in other traditional drive designs that can reach 2.7 to 3.3 times normal levels.

- **PWM** - Pulse Width Modulation is a method of controlling power devices to convert voltage levels. PWM is a popular method of control for converting DC voltage to AC voltage.
- **IGBT**- Insulated Gate Bipolar Transistor is a high speed electrical switching power device. It is very efficient requiring very low power for control circuits
- **HCT** - Hall Effect Current Transformer are used for detection of currents over a fre-quency range of DC to high frequency without direct contact or shunts.
- **CPT**- Control Power Transformer is typically used to power control circuits and relays for the VSD.
- **FLA** - Full Load Amps.

## Components

The VSD shall consist of the following components:

- Incoming Disconnect
- A 24 pulse input Isolation Transformer from high voltages to 4160 V with Rectifier that limits electrical power supply distortion.
- Frequency Converter/Inverter
- VSD Protective System/Devices
- Output filter or reactor (when required to limit reflected voltage)
- Output Disconnect(s) or bypass (when specified on Data Sheet)
- Diagnostics and Control Circuits
- Two control power transformers, for the Control Center and for chiller oil pump operation

## Features

The following features will be provided:

- PWM type utilizing IGBTs with a power factor of 0.95 or better at all loads and speeds
- Door interlocked circuit breaker capable of being padlocked
- UL listed ground fault protection
- Over voltage and under voltage protection
- 3-phase sensing motor over current protection
- Single phase protection
- Insensitive to phase rotation
- Over temperature protection
- Digital readout at the chiller unit control panel of output frequency, output voltage, 3-phase output current, input Kilowatts and Kilowatt-hours, self-diagnostic service parameters, Elapsed Time Meter
- Separate meters for this information will not be acceptable

## General design and fabrication

The VSD inverter/chopper shall be of the pulse width modulated (PWM) Neutral Point Clamp (NPC) type. The output devices shall be Insulated Gate Bipolar Transistors (IGBTs) with a minimum voltage rating of 3300 V. Use of lower rated devices is unacceptable due to the quantity of devices required in the design.

- All components and material shall be new and of the latest field proven design and in current production. Obsolete components or components scheduled for immediate discontinuation shall not be used.

- The equipment shall be completely factory built, assembled, wired, and tested. When it is necessary to disassemble the units for ease of transportation, adequate materials and instructions shall be provided for easy field reassembling.
- For VSD applications where the line voltage is higher than 6600 V, and the drive uses an input voltage of 6600 V or less, then any transformer used to reduce the line voltage from greater than 6600 V to less than 6600 V must have the transformer inefficiencies included in the chiller energy analysis.
- The VSD shall be capable of continuous operation up to altitudes of 5,000 ft (1,500 m), if not the VSD should be oversized to comply with the design conditions.

## Enclosures and cooling

The VSD enclosure shall be suitable for installation in an indoor, unclassified area.

All enclosure openings exceeding 0.25 in. (6 mm) in width shall be provided with screens to prevent the entrance of snakes, rodents, etc. The maximum screen mesh opening width shall be 0.25 in. (6 mm).

A “loss of cooling” fault shutdown shall be furnished with this forced cooled equipment. In the event of clogged filters or fan failure, the drive will shut down safely without electronic component failure.

Air filters shall be of a reusable type that can be easily cleaned. All doors or front panels will be fully gasketed. Air exhaust from cooling fans will be at the top of the enclosure away from personnel in front of the equipment.

Fan motors shall be protected by an input circuit breaker. Metal squirrel cage ball bearing 460 V three phase fan motors are to be used in the drive design. Plastic muffin fans are not acceptable. As specified on the data sheet, fan power will be obtained from a remote 460 V three-phase power or from the primary 2300 / 3300 / 4160 V power through a tap on the input transformer.

The maximum noise level of the unit shall not exceed 80 dBA at a distance of 3.3 ft (1 m) from the unit and at a height of 4.9 ft (1.5 m) above the floor.

## Painting

Use Manufacturer’s standard finish.

## Operational controls

All operator controls and adjustments are through the Chiller control center.

The VSD shall include necessary components to protect the VSD and motor against motor overload, internal faults in either the motor or VSD and disturbances in the incoming AC line.

The following conditions shall cause the VSD to be shut down with the output voltage reduced to zero. The failure shall be annunciated on the Chiller control center.

- Cooling fan loss
- Input transformer over temperature
- Heatsink over temperature
- Motor current overload
- Output current imbalance
- High output frequency
- Input phase loss
- DC Link Voltage imbalance
- DC Link Voltage overvoltage
- DC Link Voltage undervoltage

- Ground fault
- Power supply fault
- IGBT gate drive fault
- Communications fault
- Cabinet doors interlock

## Input power transformer and rectifier

The VSD shall contain an incoming isolation transformer whose primary voltage shall be as specified on the Data Sheet.

- The transformer shall contain 12 three phase secondary windings that provide the proper phase shifting to develop a 24-pulse rectification to reduce harmonic currents and voltages reflected to the primary power system.
- The transformer shall be aluminum wound and shall have a 396°F (220°C) insulation system to operate at 207°F (115°C) rise at full load conditions.
- The transformer and rectifier shall be an integral part of the VSD assembly along with primary disconnect switch, input vacuum contactor and secondary fusing eliminating the need for separate components field installation or wiring.
- Soft charge of the DC bus capacitors is accomplished by use of an input reactor on the primary of the input transformer. A vacuum contactor rated for drive full load amps will short the reactor after charge is accomplished.

## Control power transformers

A 115 V single phase nominal 2.0 kVa transformer will be supplied for chiller controls.

A 460 V three phase 50/60 Hz up to 3 kVa transformer will be supplied for chiller oil pump operation.

## Operator panel displays

All operator displays are through the Chiller control center.

The following items will be monitored and displayed:

- Output frequency
- Output voltage
- Motor current
- Input voltage
- Input power
- Energy consumption kWh

## Power requirements

The VSD shall be capable of providing rated output for continuous voltage deviations of +10%.

The VSD input short circuit withstand rating shall be 50,000 A.

The VSD shall be able to ride through voltage dips down to 10% of minimum, such as those experienced during motor starting.

The VSD 40 second overload current rating shall be set at 105% of rated compressor current.

The VSD shall help buildings comply with the requirements of IEEE Std. 519.

Voltage distortion shall not exceed 3% and current distortion shall not exceed 5% at the input lugs of the VSD over an operating power range of 30% to 100% of rated power with phase voltage imbalance per the 3% specification.

The VSD converter section shall be configured as a 24 pulse or greater to eliminate the need for harmonic filters.

## Power bus

All power bus bars, when part of the standard design and other current carrying parts shall be tin-plated copper for corrosion resistance. Power bus bar joints shall be tin plated.

Bus bars shall be braced to withstand short circuit currents shown on the Data Sheet with a minimum of 50 kAIC.

Input and output connections shall be either top or bottom access in the standard design.

## Inverter section design

The VSD inverter section shall consist of three cells where each cell has two series DC power supplies per phase. Each DC supply is derived from a phase shifted secondary of the input transformer that cancels reflected harmonics back to the power line. The DC power supply is filtered by long lasting oil filled capacitors. Electrolytic capacitors are not permitted.

Each cell has eight 3300 V Insulated Gate Bipolar Transistors (IGBTs) in a single phase bridge connection such that when in combination with the other bridges, a 5 level output voltage is constructed to the motor. A bridge neutral point is jumpered to each of the three cells. This configuration called Neutral Point Clamp (NPC) provides a normal phase to ground level voltages that are superior to other direct PWM or multi-level twelve cell VSD designs that can cause 1.8 to 3.3 times normal line to ground voltage.

Each power device communicates to the microprocessor with fiber optic communications. No other isolation method is allowed.

A high resistance ground detection circuit at the neutral point is used for system shutdowns in the event the load has a ground fault.

Two Hall Effect Current Transformers (HCT) are used for current feedback on the VSD output.

PWM firing pulses will result in an output voltage and current waveform that will result in less than 2% torque ripple over a 20 to 1 speed range on the motor.

## Disconnects

The VSD shall include a main disconnect device with an interlocked and padlockable handle mechanism. The disconnecting device shall be a medium voltage vacuum contactor with a bolted pressure disconnect switch whose blades are externally visible from outside the enclosure. The disconnect device shall have a momentary withstand rating greater than the available fault current indicated on the Data Sheet.

When multiple doors are supplied, all doors shall be electrically interlocked with the disconnect device. The interlocks shall include provisions to manually override for test and repair.

## Wiring and terminations

Bus bar with standard four-hole pattern to be supplied for input and output shall be provided for connection of external wiring and shall be conveniently located, clearly numbered, and identified.

Control wire terminal blocks for external wiring terminations shall be compression screw type, designed to accommodate stripped insulation bare wire ends, and shall accept a minimum of two No. 14 AWG wires.

Connection points for inputs and outputs of different voltage levels shall be segregated to reduce possibility of electrical noise. If necessary, this may be accomplished through the use of terminal barriers and covers.

Where wiring is run through sheet metal or any barrier, bushings, grommets or other me-chanical protection around the sheet or barrier opening shall be provided.

All internal wiring shall be terminated with no more than two (2) conductors per terminal block point.

The VSD shall have an internal mechanical ground connection suitable for terminating a stranded copper ground conductor of the same size as the incoming phase conductors. Ground connections shall be near the incoming and outgoing power cable termination points and control wiring connections.

Minimum wire bending space shall meet or exceed the value shown in NEC Table 430 10 (b) for termination of the power cable and shall be documented on Manufacturer's drawings.

### Inspection and testing

Manufacturer's standard tests shall be performed. Minimum testing shall include:

Power semiconductors shall be thermally cycled and printed circuit boards shall be burned in prior to final assembly into the VSD.

Individual power cells shall undergo a visual inspection, an electrical inspection, and a complete full load test prior to final assembly into the VSD. A test record for each power cell shall be furnished as part of the final data requirements if requested on the data sheets.

Mechanical operation tests shall be performed for each VSD to verify satisfactory operation. These tests shall include checking operating mechanisms and interlock devices.

Electrical function tests shall be performed to ensure proper operation of all devices and components including operation of the VSD at full load conditions. Instrumentation, software, and monitoring tests shall be included.

The final assembly will be tested at full load and voltage by a power back method that returns drive output power to the power line. An unloaded full voltage motor will also be used during testing.

### Shipping

Preparation for shipment shall be in accordance with Manufacturer's standards.

Loose equipment shall be appropriately packaged and secured for shipment inside the enclosure or shipping container. These items shall be properly tagged for easy identification.

### Documentation

Manufacturer Drawings and Data.

Equipment shall be shipped with one set of installation, operation, and maintenance manuals.

## Factory-installed medium voltage solid-state primary compressor starter (from 2300 V to 13200 V - 50/60 Hz) (option)

The chiller manufacturer shall furnish a reduced-voltage, Medium Voltage Solid-State-Starter, in accordance with the chiller manufacturer's starter specifications. The starter shall be of modular construction with complete access to all parts. The starter shall be tested and the design starting current and overload settings adjusted at the factory. The starter shall provide, through the use of six in-line (not inside the Delta) silicon controlled rectifiers (2 per phase), a smooth acceleration of the motor without current transitions or transients.

The following protective devices and convenience items shall be factory mounted and wired to the starter:

1. Three leg sensing electronic overloads – shuts unit down if current exceeds 105% of FLA to protect the motor windings.

2. Phase rotation protection circuit – denies start-up when detecting incorrect power wiring phase sequence to the starter which could cause reverse motor rotation and damage the equipment.
3. Single-phase failure protection circuit – ensures against motor burnout by shutting the unit down if power loss occurs in any of the incoming lines during start-up.
4. High temperature safety protection system – temperature activated switches on heat sinks will shut the unit down if the SCR temperature exceeds acceptable limits.
5. Three phase digital ammeter and digital voltmeter readout via control center – easily cross-check design current and voltage limitations against supply characteristics.
6. Starter mounted load break rated input disconnect switch with interlocked padlockable handle. Positive disconnecting means shall be visible from outside the enclosure, in operator area. All doors shall be interlocked with the disconnecting means.
7. Open/Shorted SCR Protection – Failed semiconductor devices are automatically detected and reported via the Control Center.
8. Power Fault Protection – momentary power interruption protection detects power interruptions within 3 line cycles and interrupts power to the compressor motor within 1 additional line cycle.
9. Electrical connections – these tin-plated or copper bus bars provide easy connection to incoming copper power lines.
10. Wattmeter – An instantaneous wattmeter tells the customer how much power the chiller is consuming. A kilowatt-hour energy meter is also provided to measure power consumption over a period of time.
11. Shutdown History – The Medium Voltage Solid-State-Starter shall provide the system control panel with ten histories of previous unit shutdowns initiated by the starter.

In addition, the Starter shall include as standard, the following convenience items already mounted and wired to the starter at the factory:

- Auxiliary control supply transformer – eliminates the need for running separate 115 V - 1 ph - 50/60 Hz power source wiring to the chiller Control Center.

## Remote electromechanical compressor motor starter (option)

A remote mounted electromechanical starter shall be furnished for each compressor motor. The starter shall be furnished in accordance with the chiller manufacturer’s starter specifications, and as specified elsewhere in these specifications.

## Portable refrigerant storage / recycling system (option)

A portable, self contained refrigerant storage/recycling system shall be provided consisting of a refrigerant compressor with oil separator, storage receiver, water cooled condenser, filter drier and necessary valves and hoses to remove, replace and distill refrigerant. All necessary controls and safety devices shall be a permanent part of the system.

© 2024 Johnson Controls. P.O. Box 423, Milwaukee, WI 53201, USA. Subject to change without notice. All rights reserved.