VERASYS

SMART EQUIPMENT Johnson Controls

Part No. 24-10143-01566, Rev. A
Issued March 2018

Lighting Controller Quick Start Guide

LC-VAC1001-0

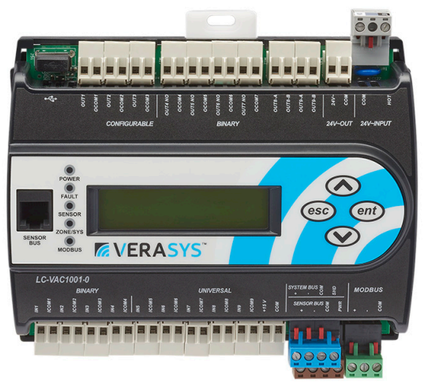

1. About this guide

This quick start guide provides the basic information needed to setup and install the Verasys LC-VAC1001-0 Lighting Controller.

For Lighting Controller sequences, and more information on system configurations, see the following documents: *Verasys 18 Point 24V Application Controller Installation Instructions* (Part. no 24-10143-01477) and *Verasys Lighting Controller Application Note* (LIT-2012524).These documents can be accessed by scanning the QR codes on the last page.

24-10143-01566, Rev. A

2. Mounting the controller on a DIN rail

a. Horizontally mount a 20 cm (8 in.) section of 35 mm (1.3 in.) DIN rail.

b. On the back of the controller, extend the two mounting clips as shown in Figure.1.

c. Place the controller on the DIN rail.

Push the bottom mounting clips inward (up) to secure the controller on the DIN rail as shown in Figure. 2

Figure 1: Pull lower mounting clips down

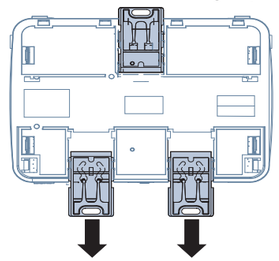

Figure 2: Push lower mounting clips up

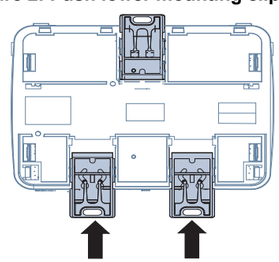

d. To remove the controller from the DIN rail, pull the bottom mounting clips out to the extended position and carefully lift the controller off the DIN rail.

3. Wiring the controller

The System bus terminal block is a blue, removable, 4-terminal plug that fits into a board-mounted jack. See Figure 4.

Wire the removable System bus terminal block in a daisy-chain configuration using 3-wire twisted, shielded cable as shown in Figure 5.

Figure 3: System Bus Terminal Block

Figure 4: System Bus Terminal Block Wiring

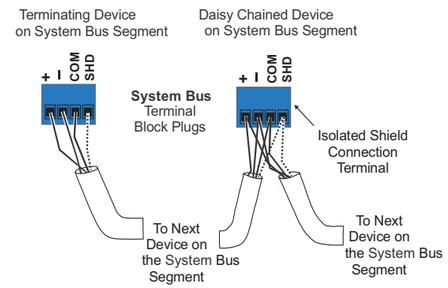

4. Wiring the Supply Power Terminal Block

Wire the 24 VAC supply power wires from the transformer to the HOT and COM terminals on the terminal plug, as shown in Figure 6.

Note: The 24 VAC supply power terminal block is a gray, removable, 3-terminal plug that fits into a board-mounted jack on the top right of the controller. See Figure 5.

Note: The middle terminal on the supply power terminal block is not used.

Note: The supply power wire colors may be different on transformers from other manufacturers. Refer to the transformer manufacturer's instructions and the project installation drawings for wiring details.

Figure 5: Supply Power Terminal Block

Figure 6: Supply Power Terminal Block Wiring

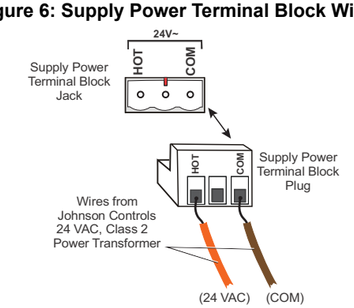

5. Wiring options

Recommended use of Pilot Relay to drive lighting contractors configurable outputs and binary output 8 and 9 are triacs rated for 5 AMP maximum current draw. Secondly, with the pilot relay you can design in a manual override if you select a relay with that functionality. Through software you can reverse the polarity of the output, which means you can drive contactors with contacts that are normally open (fail off) or normally closed (fail on).

Figure 7: Wiring Diagram

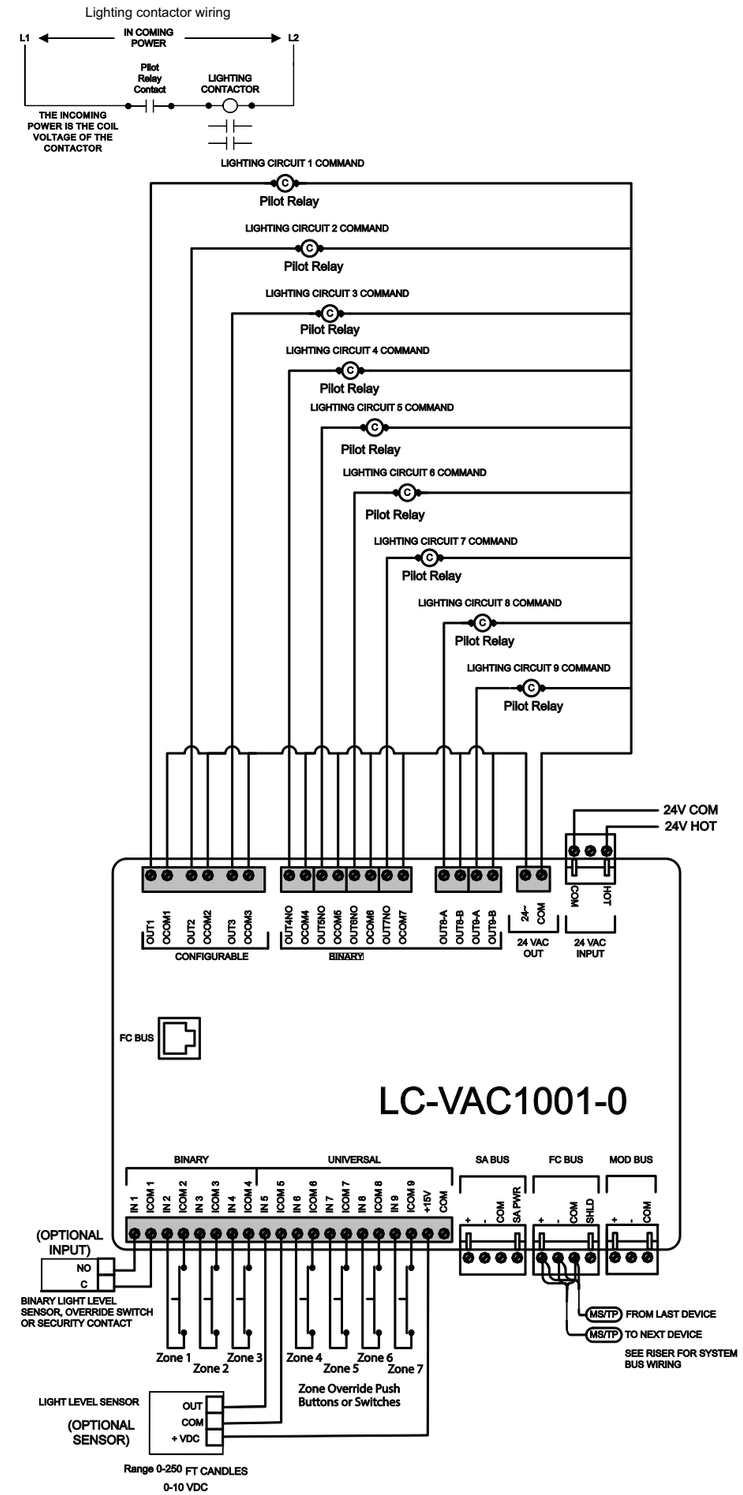

Table. 1 LC-~VAC1001-0 Controller Point List

Point Type	Object Name	Expanded ID	Field Device	Signal
BI IN1	LIGHT-S	Lighting Status	Light Sensor	Dry Contact
BI IN2	ZN1-OVR	Zone 1 Override	NA	Dry Contact
BI IN3	ZN2-OVR	Zone 2 Override	NA	Dry Contact
BI IN4	ZN3-OVR	Zone 3 Override	NA	Dry Contact
UI IN5	LIGHT-L	Ambient Light Level	MK7-B-CR-VTI	0 to 10 VDC, 0 to 250 FC
UI IN6	ZN4-OVR	Zone 4 Override	NA	Dry Contact
UI IN7	ZN5-OVR	Zone 5 Override	NA	Dry Contact
UI IN8	ZN6-OVR	Zone 6 Override	NA	Dry Contact
UI IN9	ZN7-OVR	Zone 7 Override	NA	Dry Contact
CO OUT1	LC1-C	Lighting Circuit 1 Command	Pilot Relay	24 VAC Maintained
CO OUT2	LC2-C	Lighting Circuit 2 Command	Pilot Relay	24 VAC Maintained
CO OUT3	LC3-C	Lighting Circuit 3 Command	Pilot Relay	24 VAC Maintained
RO OUT4	LC4-C	Lighting Circuit 4 Command	Pilot Relay	24 VAC Maintained
RO OUT5	LC5-C	Lighting Circuit 5 Command	Pilot Relay	24 VAC Maintained
RO OUT6	LC6-C	Lighting Circuit 6 Command	Pilot Relay	24 VAC Maintained
RO OUT7	LC7-C	Lighting Circuit 7 Command	Pilot Relay	24 VAC Maintained
BO OUT8	LC8-C	Lighting Circuit 8 Command	Pilot Relay	24 VAC Maintained
BO OUT9	LC9-C	Lighting Circuit 9 Command	Pilot Relay	24 VAC Maintained

6. Setting the VAC Controller Address using its local display

a. Access the menu by pressing the **ENT** (Enter) button.

b. Use the up and down arrows to navigate to the Commission Menu and press ENT.

c. Navigate to the Network section and press ENT.

d. Navigate to the Address section and press ENT.

e. The address defaults to 4. Press ENT again.The Address blinks.

f. Use the up or down arrow to increase or decrease the address to the desired value and press ENT. The address stops blinking and the display shows the old address.

g. To refresh the screen, press the up or down arrow. The screen displays the new address.

h. Press ESC until you return to the main screen that shows the system is operational.

7. Technical Specifications

Table.2 LC-VAC1001-0 Technical Specifications

Product Code Numbers	LC-VAC1001-0 Verasys Lighting Controller with Display
Supply Voltage	24 VAC, 20 VAC minimum/30 VAC maximum, 50/60 Hz, power supply Class 2 (North America), Safety Extra-Low Voltage (SELV) (Europe).
Power Consumption	20 VA maximum for LC-VAC1001-0 VA rating does not include any power supplied to the peripheral devices connected to Binary Outputs (BOs) or Configurable Outputs (COs). This can consume up to 12 VA for each BO or CO; for a possible total consumption of an additional 60 VA maximum.
Ambient Conditions	**Operating:** -20 to 70°C (-4 to 158°F); 10 to 95% RH noncondensing; Pollution Degree 2 **Storage:** -40 to 85°C (-40 to 185°F); 5 to 95% RH noncondensing.
Addressing	**BACnet® MS/TP:** valid field controller device addresses 4–127 Device addresses 0–3 and 128–255 are reserved and not valid field controller addresses. **N2:** Valid field controller device addresses 1 to 255.
Communications Bus	BACnet® MS/TP, ModBus (M/S): 3-wire System Bus between the supervisory controller and field controller. 3-wire Sensor Bus between controller, network sensors and other sensor/actuator devices, includes a lead to source 15 VDC supply power from controller to bus devices. 3-wire one Modbus communication half-duplex (Master RTU port).
Processor	RX631 Renesas® 32-bit microcontroller.
Memory	16 MB flash memory and 8 MB RAM.
Input and Output Capabilities	**Five Universal Inputs:** User-Configurable, 3 available modes: • Voltage Input: 0 to 10 VDC. • Current Sense Input: 4 to 20 mA. • Resistive Inputs/Dry Contact Inputs. **Four Binary Inputs:** Defined as Dry Contact maintained or Pulse Counter/Accumulator Mode. **Three Configurable Outputs:** User-Configurable, 2 available modes: • Analog Output: 0 to 10 VDC, 10 mA. • Triac Output: 24 VAC, 0.5 A (Externally sourced powered). **One Utility Output Power Port (24~ OUT):** Ability to deliver 24 VAC. **Four Binary Outputs (Relays):** Single-Pole, Single-Throw. Dry Contacts rated 240 VAC. • UL: 240 VAC 5 A Resistive, 1.9 LA/ 11.1LRA, D300 Pilot Duty, 70°C/158°F (30,000 cycles) • IEC: 240 VAC 3 A Resistive, 3A Inductive, Cos=0.6, -20 to 70°C (-4 to 158°F) (100,000 cycles). **Note:** Reference all relay commons to the same pole of the supply circuit. **Two Binary Outputs (Triacs):** Output: 24 VAC or 240 VAC, 0.5 A (Externally Powered). **Note:** Reference all triac commons to the same pole of the supply circuit.
Analog Input/ Analog Output Resolution and Accuracy	Analog Input: 12-bit resolution; Analog Output: 15-bit resolution; +/- 200 mV accuracy in 0 to 10 VDC applications.
Terminations	Input/Output: Fixed Spade terminals. Sensor/System/Modbus: 4-Wire and 3-Wire Pluggable Screw Terminal Blocks. Sensor Bus Tool Port: RJ-12 6-Pin Modular Jack. Field Install Option: Input/Output: Fixed Solder terminals. Sensor/System/Modbus: 4-Wire and 3-Wire Pluggable Screw Terminal Blocks. Sensor Bus Tool Port: RJ-12 6-Pin Modular Jack. See Table 5 for Number of Cycles and Electrical Ratings.
Mounting	Horizontal on single 35 mm DIN rail mount is preferred, or screw mount on flat surface with three integral mounting clips on controller. Mount the PEAK controllers on a wall or DIN rail inside an enclosure rated at least IP20.
Housing	Enclosure material: Polycarbonate Lexan SABIC EXL9330.
Dimensions (H x W x D)	164 x 125 x 53 mm (6.45 x 4.92 x 2.08 in.) excluding terminals and mounting clips
Weight	0.5 kg (1.1 lb)
Compliance	**United States:** cULus Listed, File E107041, CCN PAZX, UL 916, Energy Management Equipment FCC Compliant to CRF47, Part 15, Subpart B, Class A
	Canada: cULus Listed, File E107041, CNN PAZX7 CAN/CSA C22.2 No.205, Signal Equipment Industry Canada Compliant, ICES-003
	Europe: Johnson Controls declares that this product is also in compliance with the essential requirements and other relevant provisions of the EMC Directive Declared as Electronic Independently mounted control, suitable for DIN rail mounting. Intended to mount in remote panel. Type 1.C (Micro-interruption), 330 V rated impulse voltage. 125°C ball pressure test.
	Australia and New Zealand: RCM Mark, Australia/NZ Emissions Compliant
	BACnet International: BACnet Testing Laboratories (BTL) Protocol Revision 12 Listed BACnet Advanced Application Controller (B-AAC)

European Single Point of Contact:
JOHNSON CONTROLS
WESTENDHOF 3
45143 ESSEN
GERMANY

NA/SA Single Point of Contact:
JOHNSON CONTROLS
507 E MICHIGAN ST
MILWAUKEE WI 53202
USA

APAC Single Point of Contact:
JOHNSON CONTROLS
C/O CONTROLS PRODUCT MANAGEMENT
NO. 22 BLOCK D NEW DISTRICT
WUXI JIANGSU PROVINCE 214142
CHINA